Surface Rotary Drilling System & Rig Components

Jakarta Drilling Society

© Jakarta Drilling Society 2025

Ignatius Febrianta

- Various Positions in Drilling Contractor in least 20 years as:
  - Procurement
  - Maintenance & Refurbishment
  - Operation & IPM
- Currently working In Pilar Anggaraksa & Bangun Energi Pusaka Indonesia
- Past Companies: Plumpang Raya Anugrah, ELNUSA, Alam Bersemi Sentosa and Geo Drilling Indonesia

- Assets involvement
  - Drilling Rigs: Mechanical and Electrical inc. DC-DC, DC Drive (SCR) and AC Drive (VFD)
  - Hydraulic Workover Unit (HWU)
  - Coil Tubing Unit (CTU)
  - Electric Wireline Unit
  - Coring Rig

© Jakarta Drilling Society 2025

Safety Moment

HSE is My Culture
Equipment is My Life
Cost is My Attitude

Jakarta Drilling Society

© Jakarta Drilling Society 2025

Sharing Notes

1. Please makes personnal notes for name of equipments or tools
2. Ask if you are in Doubt
3. Reference Only

© Jakarta Drilling Society 2025

Contents

1. **Type of Rotary Drilling Rigs**
   a. Offshore
   b. Onshore
2. **Standards of Drilling System**
3. **Drilling System & Rig Components**
   a. Hoisting & Rotating System
   b. Mud Circulating System
   c. Power Generation & Control System
   d. Well Control System
   e. Drilling Instrumentation
   f. Drilling String & BHA
   g. Tubular Handling tools
4. **Rig Inspections & Maintenance**

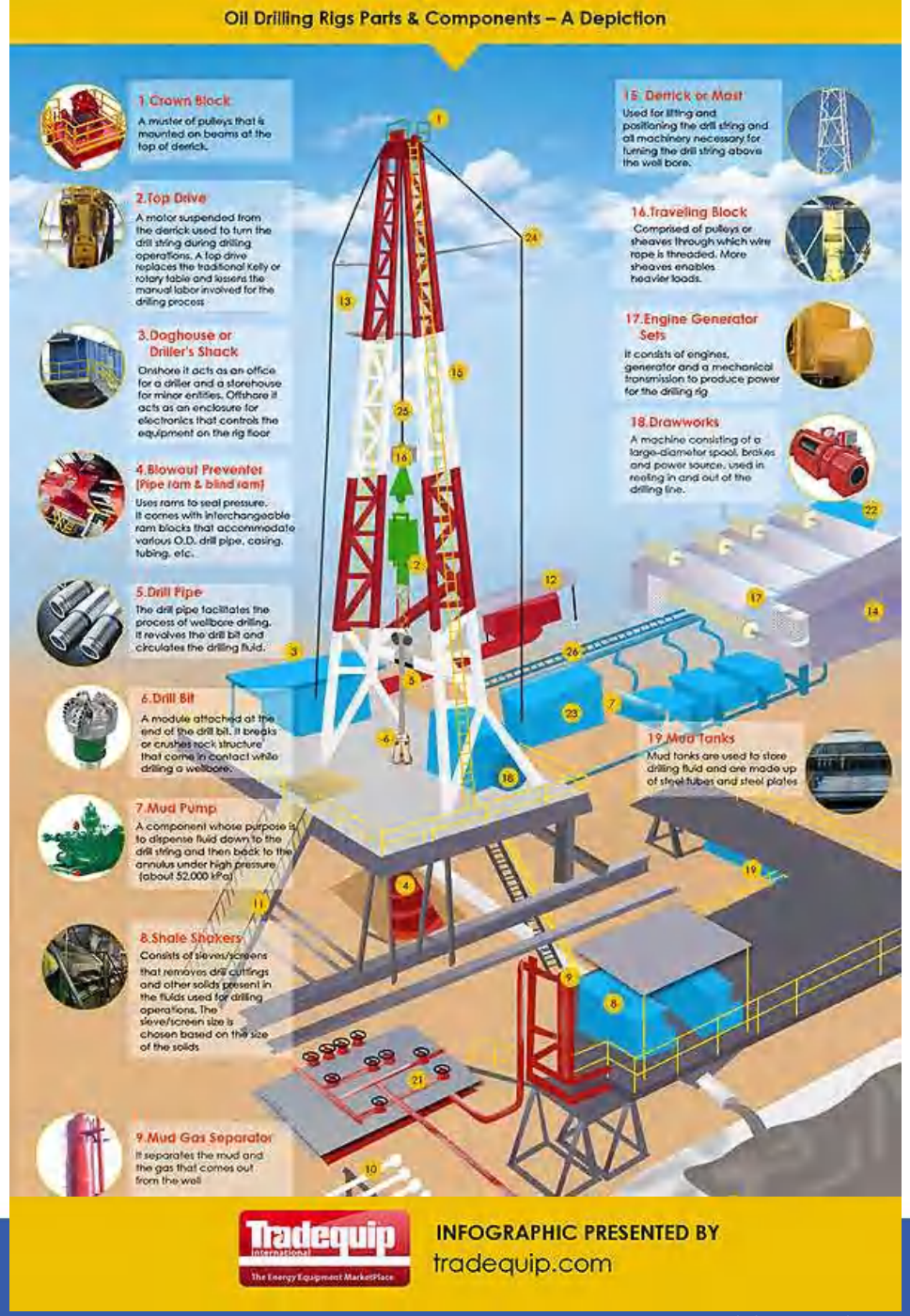

© Jakarta Drilling Society 2025

Type Rotary Drilling Rigs

© Jakarta Drilling Society 2025

Type Rotary Drilling Rigs

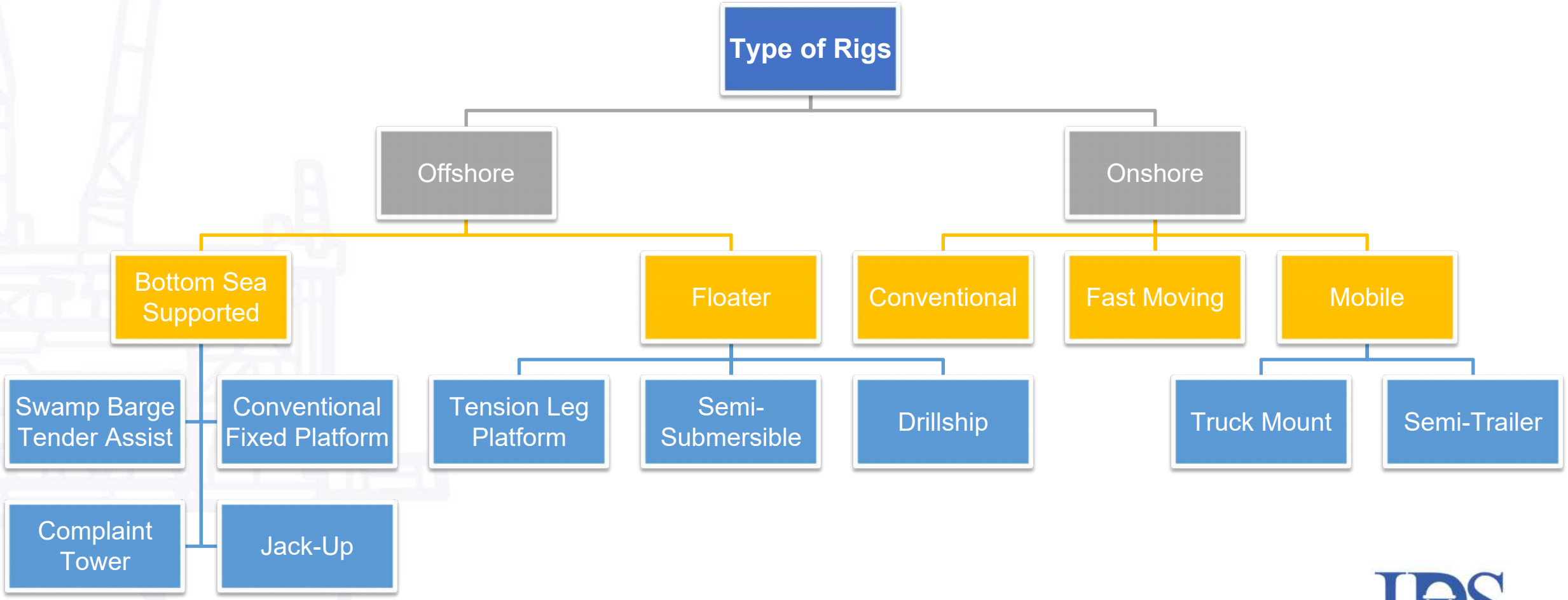

© Jakarta Drilling Society 2025

Type of Offshore Rigs

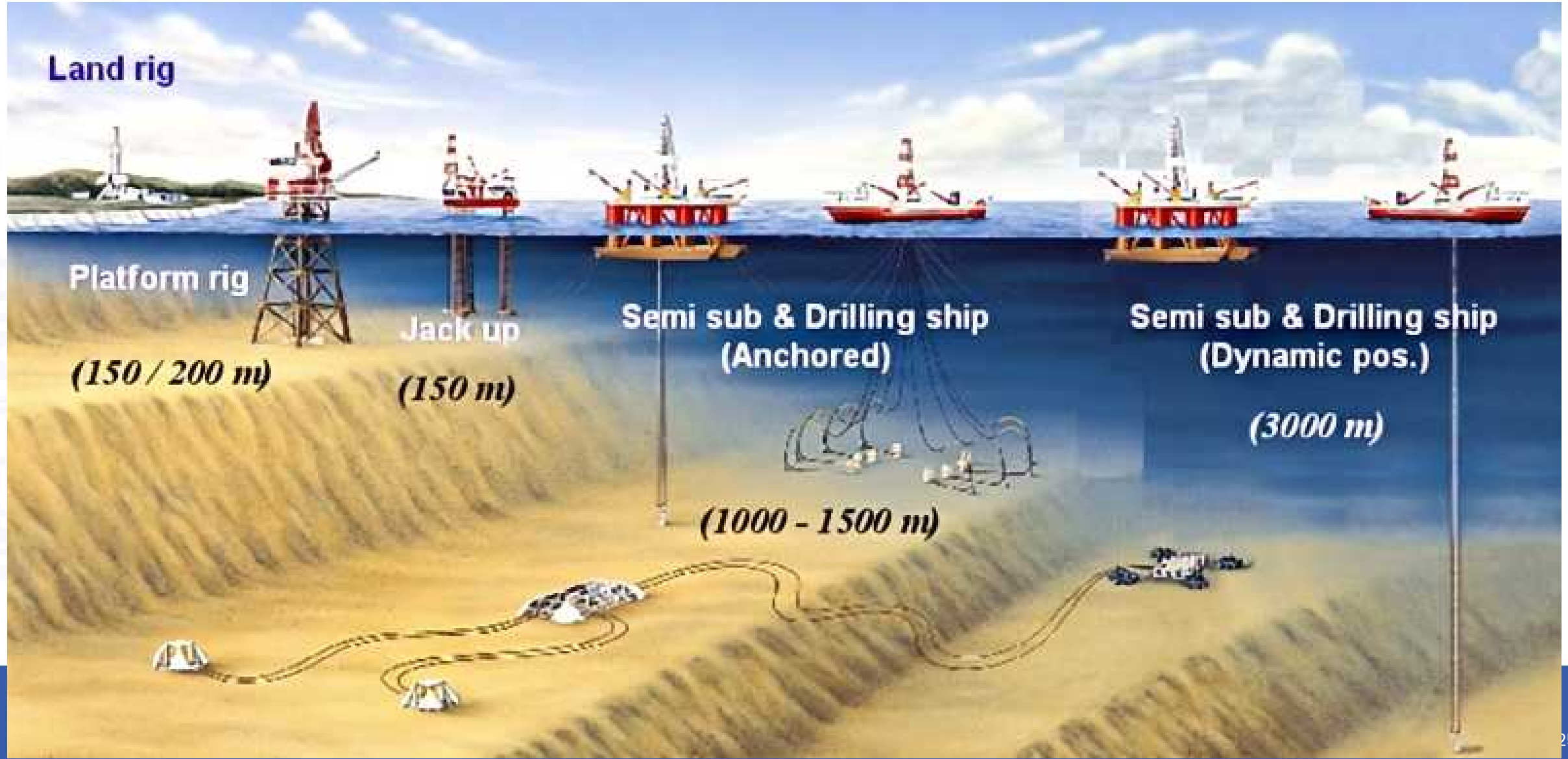

Type of Offshore Rigs

© Jakarta Drilling Society 2025

Type of Offshore Rigs

© Jakarta Drilling Society 2025

Type of Onshore Rigs

© Jakarta Drilling Society 2025

Type of Onshore Rigs

© Jakarta Drilling Society 2025

Type of Onshore Rigs

Jakarta Drilling Society

© Jakarta Drilling Society 2025

Standard of Drilling System

© Jakarta Drilling Society 2025

Jakarta Drilling Society

Standard of Drilling System

- American Petroleum Institutes (API)
- Norwegian Petroleum Industry (NORSOK)
- Standar Nasional Indonesia (SNI)
- Standard New Zealand (NZS)

© Jakarta Drilling Society 2025

API MONOGRAM - PERANGKAT PEMBORAN

- API Spec 4F: Drilling and Well Servicing Structures
- API RP 4G: Maintenance & Use of Drilling and Well Service Structure
- API Spec 7K: Drilling Equipment
- API RP 7L: Inspection, Maintenance, Repair and Remanufacture of Drilling Equipment
- API RP 7G : Recommended Practice for Drill Stem Design and Operating Limits
- API RP 8B: Inspection, Maintenance, Repair and Remanufacture of Hoisting Equipment
- API Spec 8C: Drilling and Production Hoisting Equipment (PSL 1 & PSL 2)

© Jakarta Drilling Society 2025

API MONOGRAM - PERANGKAT PEMBORAN

- API Spec 9A: API Specification for Wire Rope
- API RP 9B: Application, Care and Use of Wire Rope for OilField Service
- API RP 7C-11F: Installation Maintenance and Operation of Internal Combustion Engines
- API Spec 7F: OilField Chains and Sprockets
- API Spec 16A: Drill Through Equipment
- API Spec 16C: Choke and Kill Systems
- API Spec 16D: Control Systems for Drilling Well Control Equipment

Jakarta Drilling Society
© Jakarta Drilling Society 2025

API MONOGRAM - PERANGKAT PEMBORAN

- API RP 53 Recommended Practices for Blow Out Protection Equipment Systems for Drilling Wells
- API RP 54 Recommended Practices for Safety and Health for Oil and Gas Well Drilling and Servicing Operations
- API RP 500: Classification of Locations Electric Installation at Petroleum Facilities Classified as Class 1 Div1 and Div 2

https://www.api.org/products-and-services/api-monogram-and-apiqr/directory

© Jakarta Drilling Society 2025

PARTS & COMPONENT OF DRILLING RIGS

- HOISTING SYSTEM - API 4F, API 4G, API 8B, API 9A
- POWER SYSTEM - API 7C, API RP500
- ROTATING SYSTEM - API 7L, API 7K
- CIRCULATING SYSTEM - API 7K, API RP500, API RP13C
- CONTROL & MEASUREMENT SYSTEM -API16A, API 16B, API 16D, API RP53

Persetujuan Layak Operasi (PLO)

UMUM	
PLO sebelumnya	027/55-1044/PLO/DJM.T/2018
Manufacturing Data Record	XJ550 Workover Rig Operation Instruction JJ13533 Wngineering Calculation Manufacture XJ550 Welding Procedure Specification
Lay Out Diagram	No Doc :
Gambar Teknik	Drawing JJ13533-00
Standar yang diacu	API Spec 4F: Drilling and Well Servicing Structures API RP 4G: Maintenance & Use of Drilling and Well Servicing Structures API Spec 7K: Drilling Equipment API RP 7L: Inspection, Maintenance, Repair and Remanufacture of Drilling Equipment API RP 8B: Inspection, Maintenance, Repair and Remanufacture of Hoisting Equipment API Spec 9A: Wire Ropes API RP 9B: Application, care and use of Wire Rope for Oil Field Service API RP 7C-11F: Installation, Maintenance and Operation of Internal Combustion Engine API Spec 16A: Drill Through Equipment API Spec 16C: Choke & Kill System API Spec 16D: Control Systems for Drilling Well control Equipment API STD 53: Blow Out Prevention Systems for Drilling Wells API RP 54: Occupational Safety for Oil and Gas Well Drilling & Serv Op API RP 500: Recommended Practice for Classification of Locations Electrical Installation at Petroleum Facilities Classified as Class 1 Div.1 and Div. 2 AWS D1.1: Structural Welding Code
Zona Klasifikasi Daerah Berbahaya	No Doc: API-HSE-036.001/FORM
Prosedur Tanggap Darurat	No Doc: API-HSE-006/PRO
Perusahaan Inspeksi	
Pabrik Pembuat	RG Petro-Machinery (Group) Co., Ltd

DATA INSTALASI	
Tipe	Mobile Rig
Nomor Seri Menara	RG14032
Kapasitas *Hook Load*	300.000 Lbs / 136 Ton Metrik
Tinggi Menara	115 ft / 35 Meter
Beban Kerja Aman	292.657 Lbs / 132,75 Ton Metrik – based on drilling line calculation

© Jakarta Drilling Society 2025

Drilling System & Rig Components

© Jakarta Drilling Society 2025

Jakarta Drilling Society

Conventional Rig vs Mobile Rig

Conventional Drilling Rigs	Mobile Drilling Rigs
Advantage: • Stands in the tripple – faster tripping • Powerful equipment – drawwork over 1000 HP, mud pumps over 1000 HP • Heavy casing string run deeper –Hook loads over 200 tons • Diesel electric drive. • Substructure higher and drilling floor greater area. **Disadvantage:** • Greater investmens at start • More days for moving • More truck loads • Longer rigging up • Large surface of wellsite • More personnel –more experienced and specialists. • Heavy drilling and handling equipment	**Advantage:** • Smaller investment at start • Faster moving • Less truck loads • Less area for well site • Smaller waste pit • Less spare parts stock **Disadvantage:** • Stands in the double- slow triping • Mostly mechanical rigs – high noise level. • Mud pump SPM restricted due drive diesel engine. • Restricted height bellow rotary table for BOP stack. • Less surface of drilling floor – safety

Jakarta Drilling Society
© Jakarta Drilling Society 2025

HorsePower vs Drilling Depth (rule of thumb)

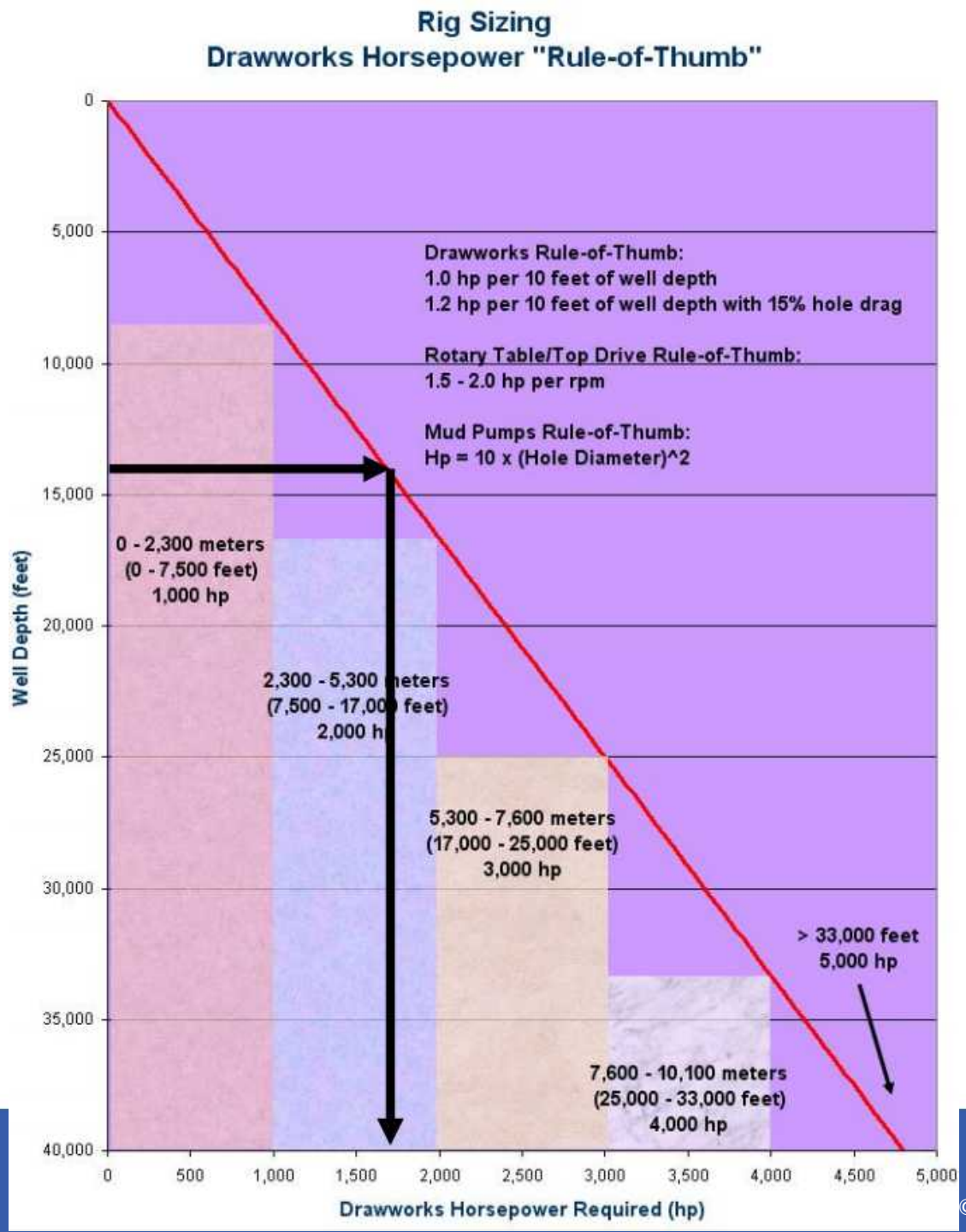

© Jakarta Drilling Society 2025

Typical Rig Configuration

Capacity (Min-Max)	Unit	650 HP	700-850 HP	1000-1150 HP	1200-1340 HP	1500 HP	1700-1800 HP	2000 HP
Rated Drilling Depth	Meter	1800	2500 3993	3000 3800	3700 5000	3500 6095	5100 9144	3500 6700
Mast Capacity (Hook Load)	K-Lbs	350 400	400 500	440 650	441 672	675 1000	850 1000	975 1250
Rotary Table Opening	Inch	17.5 27.5	20.5 27.5	27.5	27.5 37.5	27.5 37.5	37.5	37.5
Rotary Table Height	Meter	4.9 5.5	4.9 7.6	5.7 10.25	7.71	6.1 9.1	8.2 9.4	8.2 9.1
Mud Pumps	HP	1000 1300	900 1300	1000 1600	1000 1300	1300 1600	1300 1600	1300 1700
Mud Tanks	Bbls	500 1000	750 1230	1050 1547	1383 2100	1000 2400	1080 1960	1476 1812

Jakarta Drilling Society
© Jakarta Drilling Society 2025

Line Organization of the Rig Crew

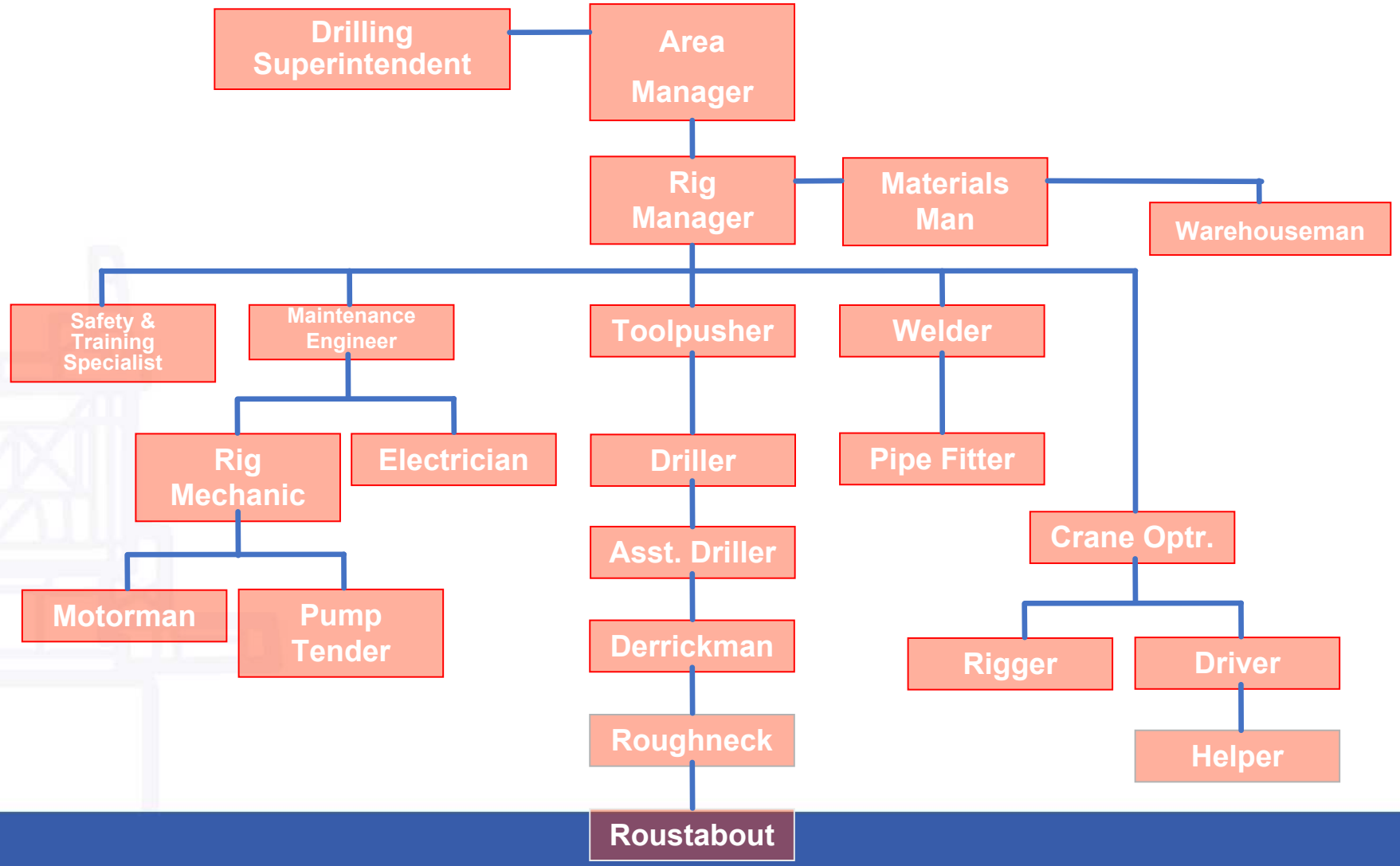

© Jakarta Drilling Society 2025

Drilling System & Rig Components

Hoisting & Rotating System

© Jakarta Drilling Society 2025

Jakarta Drilling Society

Hoisting & Rotating System

1. Mask & Substructure
2. Crown Block
3. Traveling Block
4. Top Drive / Swivel
5. Rotary Table
6. Drawworks
7. Drilling Line
8. Deadline Anchor

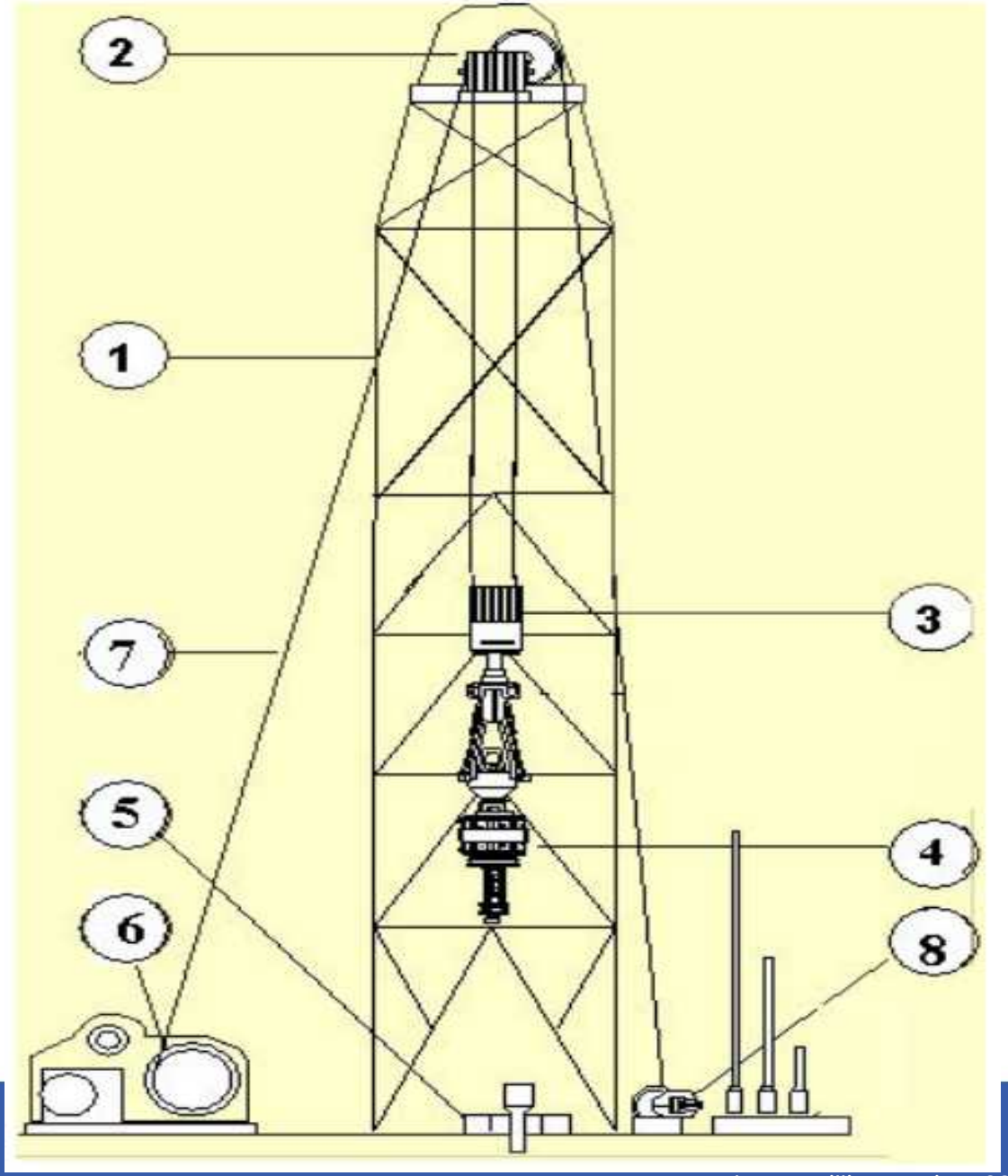

© Jakarta Drilling Society 2025

Hoisting & Rotating System

- Mast and Derrick
  - Structure of drilling rig that hold weight of drilling string or other tubulars goods in the well.
  - Fixed structure named Derrick, and Portable Structure named Mast.
  - Height of Mast: Single Joint, Double Joints and Triple Joints
  - Type of Mast: Cantilever and Telescopic

Jakarta Drilling Society
© Jakarta Drilling Society 2025

Hoisting & Rotating System

GUYED MASTS FOR WHEEL MOUNTED LAND RIGS

Clear Height	Model	Gross Nominal Capacity	Maximum Static Hook Load Capacity (lbs) Re: Number of Lines to Traveling Block 4	6
57	M057GS	250,000	125,000	
72	M072GT	250,000	125,000	
96	M096GT	350,000	175,000	210,000
98	M098GT	350,000	175,000	210,000
103	M103GT	450,000	225,000	270,000
112	M112GT	580,000	290,000	350,000

ANGLE LEG*, FLOOR MOUNT, CANTILEVER MASTS

Clear Height	Base Width	Model	Gross Nominal Capacity	Maximum Static Hook Load Capacity (Lbs) Re: Number of Lines to Traveling Block 6	8	10	12
97	12	M09712-420	420,000	252,000	280,000		
97	13-1/2	M09713-420	420,000	252,000	280,000		
127	13-1/2	M12713-420	420,000	252,000	280,000		
127	14-1/3	M12714-420	420,000	252,000	280,000		
127	13-1/2	M12713-510	510,000	306,000	340,000		
127	18-1/2	M12718-510	510,000	306,000	340,000		
133	15	M13315-510	550,000	330,000	367,000		
133	18-1/2	M13318-550	550,000	330,000	367,000	392,000	
133	21	M13321-700	700,000		467,000	500,000	
136	21	M13621-800	800,000		533,000	572,000	
142	21	M14221-1000	1,000,000		667,000	714,000	750,000
142	25	M14225-1000	1,000,000			714,000	750,000
142	25	M14225-1330	1,330,000			925,000	1,000,000
142	25	M14225-1500	1,500,000			1,070,000	1,125,000

* Models M14225-1330 and M14225-1500 both have lower sections constructed with beam legs (not angle legs).

Jakarta Drilling Society
© Jakarta Drilling Society 2025

Hoisting & Rotating System

ITEM	DESCRIPTION	GRADE	PC	QTY	LENGTH, mm	WIDTH, mm	MASS, kg
1	CM650-011.02.000 Mast shoe			2			410
2	CM650-011.03.000 Front shoe			2			519
3	CM650-011.05.000 A-frame			1			16256
4	CM650-011.06.000 Mast bottom section			1			21931
5	CM650-011.07.000 Mast lower intermediate section			1			12218
6	CM650-011.08.000 Mast upper intermediate section			1			9658
7	CM650-011.09.000 Mast top section			1			9289
8	CB650-011.29.000 Crownblock			1			13790
9	CM650-011.01.000 Mast pins			1			820
10	CM650-011.12.000 Racking board			1			4795
11	CM650-011.10.000 Belly board			1			476

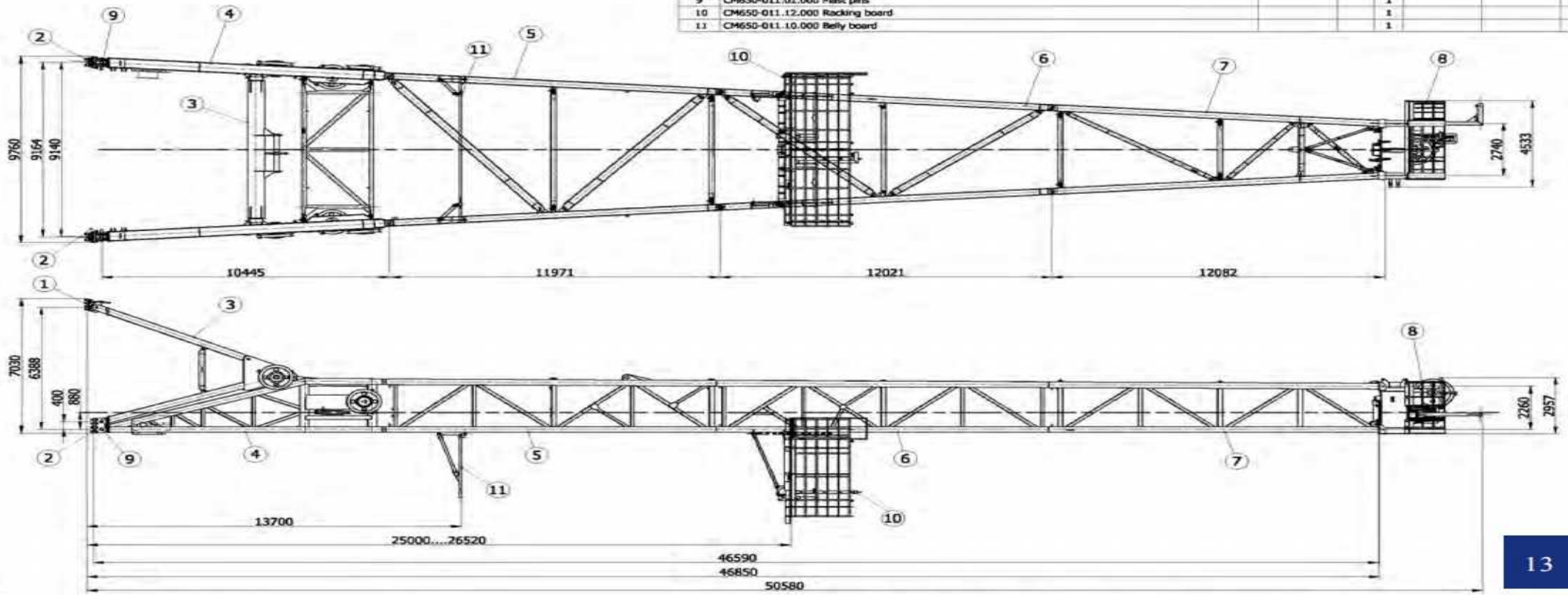

Notes:
1. Dimensions for general reference only;

UNLESS OTHERWISE SPECIFIED

DESCRIPTION: N/A
GRADE: N/A
ESTIMATED WEIGHT: 90840 kg
DO NOT SCALE DRAWING

DISCOVERY drilling equipment

MAST ASSEMBLY

FROM ASSEMBLY: CM650-010.00.000
USED ON: P 016
SCALE (X:X): N/A
SHT. 1 OF 1
DRAWING NO: CM650-011.00.000
REVISION: A

REV	DATE	REVISION NOTE	DRAWN	CHKD	APPR
A	02.07.2012	First issue	Brus	Sergen	Garbuzyuk

© Jakarta Drilling Society 2025

Hoisting & Rotating System - Crown Block

Design - AISC 335-89 (CH D, E, F, H, J)
Fabrication - AISC 335-89 (CH M)
Welding – AWS D1.1/D1.1M:2010

Shafts & Shaft Houses
API SPEC 4F

First Line Sheaves
API SPEC 8C

Cluster Line Sheaves
API SPEC 8C

Handrail & Kick Plate (Prevention of drop objects)
API SPEC 8C

First Line (Wire Rope)
API RP 9B

Crown Block Main members
API SPEC 4F/ AISC 335-89

Cluster Line (Wire Rope)
API RP 9B

© Jakarta Drilling Society 2025

Hoisting & Rotating System - Traveling Block

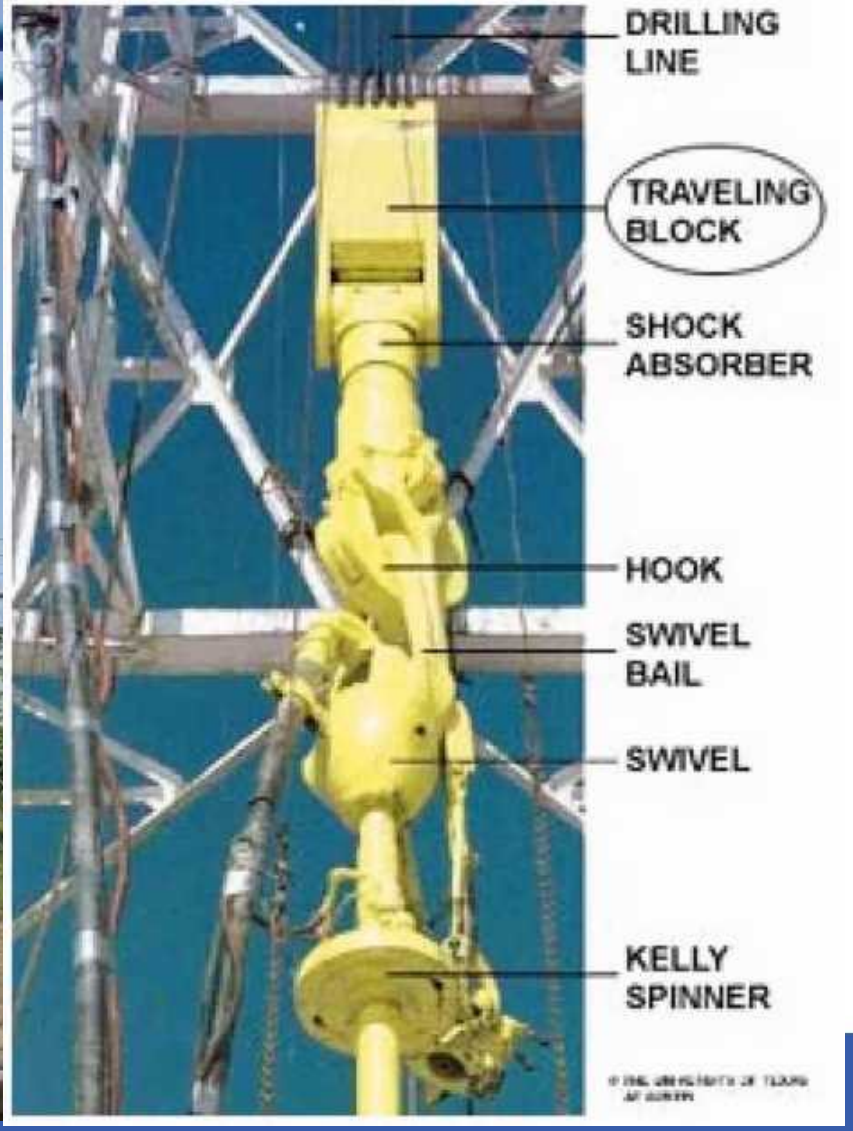

© Jakarta Drilling Society 2025

Hoisting & Rotating System - TopDrive

© Jakarta Drilling Society 2025

Hoisting & Rotating System - TopDrive

- Features IDS-1 TDS-4H TDS-4S TDS-6S

Features	IDS-1	TDS-4H, TDS-4S				TDS-6S
Application:	▪ Jack-ups, Platforms, Barges and Land Rigs	▪ All offshore Rigs, Barges and Large Land Rigs				▪ Large Offshore Rigs
Motor:	GE 752 Shunt Hi-Torque DC Motor, 1100 HP	GE 752 Series or Shunt Hi-Torque DC Motor, 1130 HP				
API Hoisting Capacity:	500 ton	500, 650 or 750 ton				750 ton
Dolly Sizing: (setback x spacing)*	Guide track setback 33-3/4" or 41"	Swing / Non-Swing: 30 x 72, 32 x 72, 39 x 66, 48 x 62		Retract / Non-Retract: 91 x 108		101" x 108" Retract or Non-Retract
Pipe Handler:	PH-60d (60,000 lb. ft. torque)	PH-85 (85,000 lb. ft. torque)				
Drill Pipe Sizes:	3-1/2" to 5" (4" to 6-5/8" OD Tool Joint)	3-1/2" to 6-5/8" (4-5/8" to 8-1/4" OD Tool Joint)				3-1/2" to 6-5/8" (4-5/8" to 8-1/4" OD Tool Joint)
Stack Up Height:	22.8 ft. (6.9M)	TDS-4H: 26.2 ft. (7.9 M)**		TDS-4S: 20.8 ft. (6.3 M)		23.0 ft. (7.0 M)
System Output:	Shunt	Series		Shunt		Shunt
Torque (lb. ft.)		Hi	Lo	Hi	Lo	
Continuous	34,900	32,500	50,900	29,640	46,380	60,000
Intermittent	38,800	43,400	67,800	39,500	61,800	84,200
Maximum RPM @ Full Power	173	190	120	205	130	195

Features	TDS-10SA		TDS-11SA
Application:	▪ Medium and Small Land Rigs, Platform Rigs, Jack-Ups		
Motor:	Reliance Electric AC Motor, 350 HP		Reliance Electric Dual AC Motor, 2 x 400 HP
API Hoisting Capacity:	250 ton		500 ton
Dolly Sizing: (setback x spacing)*	21.5" Guide Track Setback		30" or 33-3/4" Guide Track Setback
Pipe Handler:	PH-50 (55,000 lb. ft. torque)		
Drill Pipe Sizes:	2-7/8" to 5" (4" to 6-5/8" OD Tool Joint)		3-1/2" to 5" (4" to 6-5/8" OD Tool Joint)
Stack Up Height:	15.3 ft. (4.7 M)		18 ft. (5.4 M)
System Output: Torque (lb. ft.)	Standard	High Speed	Standard
Continuous	20,000	7,400	37,500
Intermittent	36,500	13,390	55,000
Maximum RPM @ Full Power	182	240	228

Jakarta Drilling Society

© Jakarta Drilling Society 2025

Hoisting & Rotating System - Rotary Table

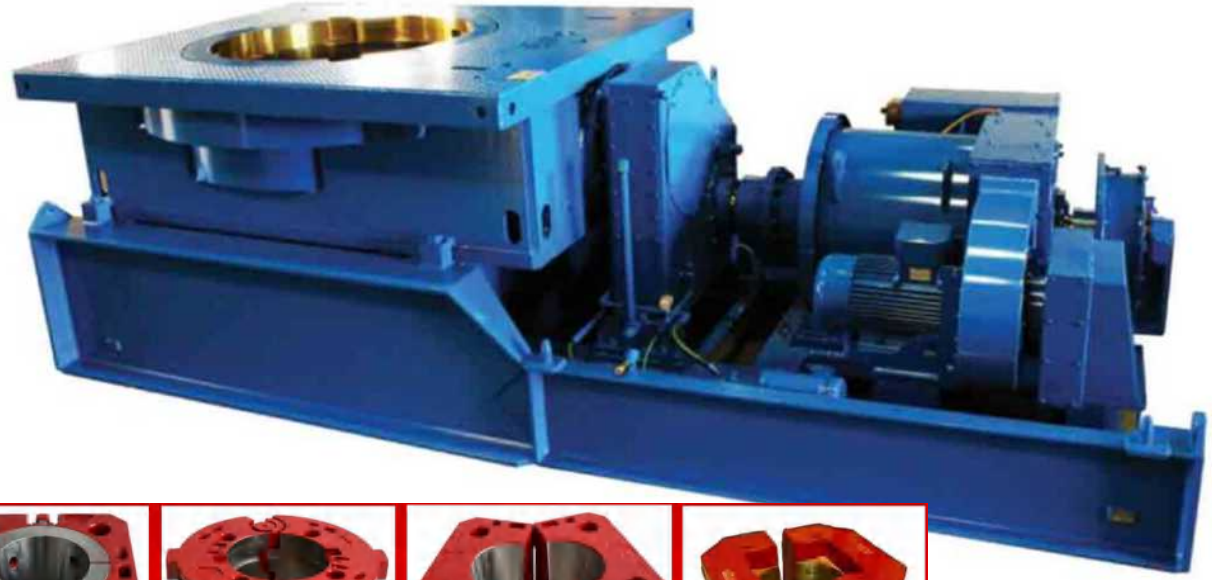

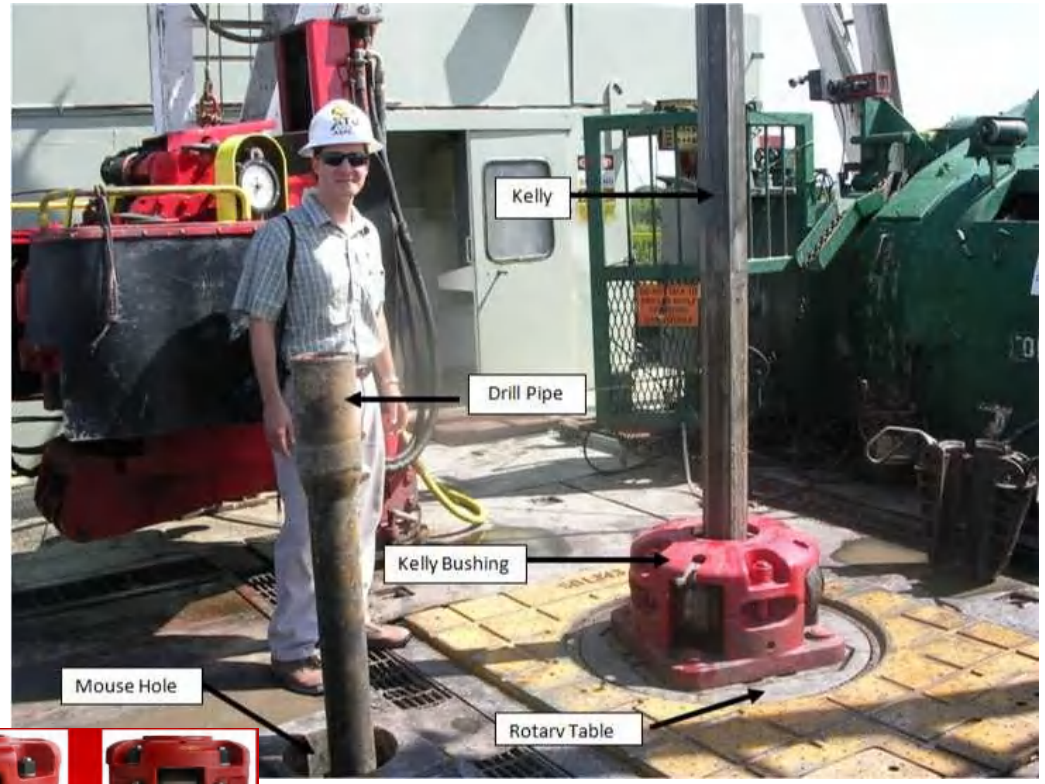

© Jakarta Drilling Society 2025

Hoisting & Rotating System - Rotary Table

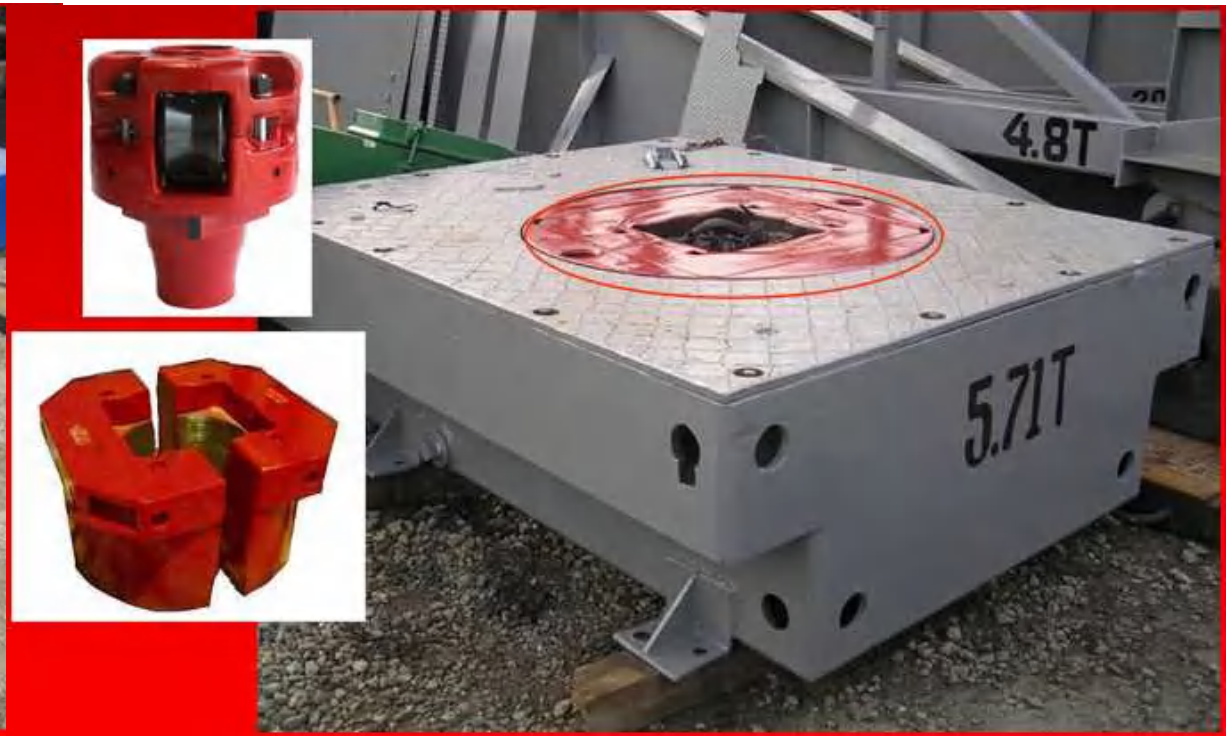

© Jakarta Drilling Society 2025

Hoisting & Rotating System - Rotary Table

- Casing Bushing

Casing bushing are set inside the Rotary table instead of master bushing for big CSG size.

- CU and CUL models are integrals,
- CB model is split in two.

Casing Bushings

© Jakarta Drilling Society 2025

Hoisting & Rotating System - Rotary Table

© Jakarta Drilling Society 2025

Hoisting & Rotating System - Drawworks

- Single Drum
  Double Drum

MAIN SYSTEMS

a - Main Drum
b - Catheads
c - Stationary Brake (Main brake)
d - Auxiliary brake

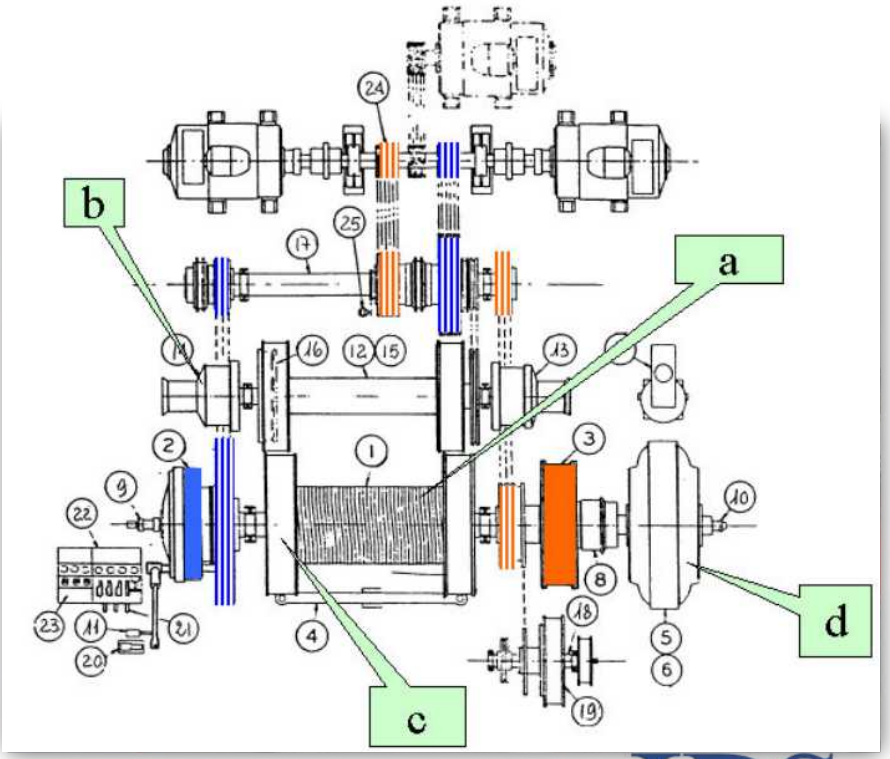

© Jakarta Drilling Society 2025

Hoisting & Rotating System - Drawworks

Mechanical Type (Technical Data)

NATIONAL OILWELL — Mechanical Drawworks

Model No.	370	610	80-B	110-M 110-UDBM	1320-M 1320-UDBM	1625-M 1625-UDBM	M-3000 M-3000UDB
Horsepower rating (Kw)	550 (410)	750 (559)	1000 (746)	1500 (1119)	2000 (1492)	3000 (2238)	3000 (2238)
Nominal depth range, ft.(m)	3000 to 7000 (914 to 2134)	6000 to 10000 (1829 to 3048)	8000 to 12000 (2438 to 3658)	11000 to 16000 (3353 to 4877)	13000 to 20000 (3962 to 6096)	16000 to 25000 (4877 to 7620)	30000 (9144)
Wireline size, inches	1⅛	1⅛	1¼ - 1⅜	1¼ - 1⅜	1⅜ - 1½	1½ - 1¾	1⅜ - 1¾
Hoisting drum size, in.(mm)	18 x 38¾ (457 x 984)	20 x 46¾ (508 x 1187)	25 x 49 (635 x 1245)	27 x 49 (686 x 1245)	30 x 56¼ (762 x 1429)	36 x 61¼ (914 x 1556)	36 x 62 (914 x 1575)
Width for transportation ft./in.(mm)	Less console 9'-8½" (2959)	Less engines - 12' (3658)	8'-0" (2438)	8'-11 5/16" (2723)	8'-0" (2438)	8'-0" (2438)	10'-0" (3048)
Height, overall ft./in.(mm)	6'-10⅛" (2086)	8'-1" (2464)	†8'-5½" (2578)	†8'-11" (2718)	†9'-6" (2896)	†9'-6¾" (2915)	9'-9 15/16" (2996)
Length, overall ft./in.(mm)	On Appl.*	On Appl.*	22'-11" (6985)	23'-2" (7061)	25'-6" (7772)	26'-8" (8128)	25'-3" (7696)
Weight, lbs. (Kgs.) less optional equipment	26,880 (12,193)	33,600 (15,241)	44,370 (20,126)	52,590 (23,855)	75,720 (34,346)	87,140 (39,526)	78,000 (35,381)

UDB = Universal Disc Brake. *Varies with drive group selected. †With coring reel.

Electric Type (Technical Data)

NATIONAL OILWELL — Electrical Drawworks

Model No.	370-E	610-E	610-EP	80-UE	110-UE 110-UDBE	1320-UE 1320-UDBE	1625-DE 1625-UDBE	E-3000 E-3000UDB	2040-UDBE
Horsepower rating (Kw)	550 (410)	750 (559)	1250 (933)	1000 (746)	1500 (1119)	2000 (1492)	3000 (2238)	3000 (2238)	4000 (2983)
Nominal depth range, ft.(m)	3000 - 7000 (914 - 2134)	6000 -10000 (1829 - 3048)	6000 - 10000 (1829 - 3048)	8000 - 12000 (2438 - 3658)	11000 - 16000 (3353 - 4877)	13000 - 20000 (3962 - 6096)	16000 - 25000 (4877 - 7620)	30,000 (9144)	20,000 - 40,000 (6096 -12,192)
Wireline size, inches	1⅛	1⅛	1⅛	1¼ - 1⅜	1¼ - 1⅜	1⅜ - 1½	1½ - 1¾	1⅜ - 1¾	1⅝ - 2
Width, overall ft./in.(mm)	10'-11¼" (3334)	12" (3658)	10' - 6" (3200)	11'-8⅝" (3572)	11'-11½" (3645)	14'-0" (4267)	18'-0" (5486)	17'-11¼" (5467)	23'-11" (7290)
Width for transportation ft./in.(mm)	Less console 9'-8½" (2959)	12' (3658)	10'-6" (3200)	8'-9" (2667)	8'-9½" (2680)	8'-0" (2438)	9'-11" (3023)	10'-0" (3048)	11'-11" (3632)
Height, overall ft./in.(mm)	†6'-10⅛" (2086)	†8'-1" (3419)	7'-7⅛" (2315)	†8'-5½" (2578)	†8'-11 5/16" (2723)	†9'-6" (2896)	†9'-10" (2997)	9'-9 15/16" (2996)	11'-2⅝" (3419)
Length, overall ft./in.(mm)	20'-0" (6096)	19'-6" (5944)	20'-8⅛" (6322)	22'-11" (6985)	23'-3" (7087)	25'-6" (7772)	25'-10" (7874)	25'-3" (7696)	31'-7" (9728)
Weight, lbs. (Kgs.) less optional equipment	27,525 (12,485)	32,270 (14,638)	33,410 (15,155)	45,640 (20,702)	52,205 (23,680)	73,780 (33,466)	83,620 (37,930)	82,000 (37,195)	118,500 (53,751)

UDB = Universal Disc Brake. †With coring reel.

JDS Jakarta Drilling Society

© Jakarta Drilling Society 2025

Hoisting & Rotating System - Drawworks

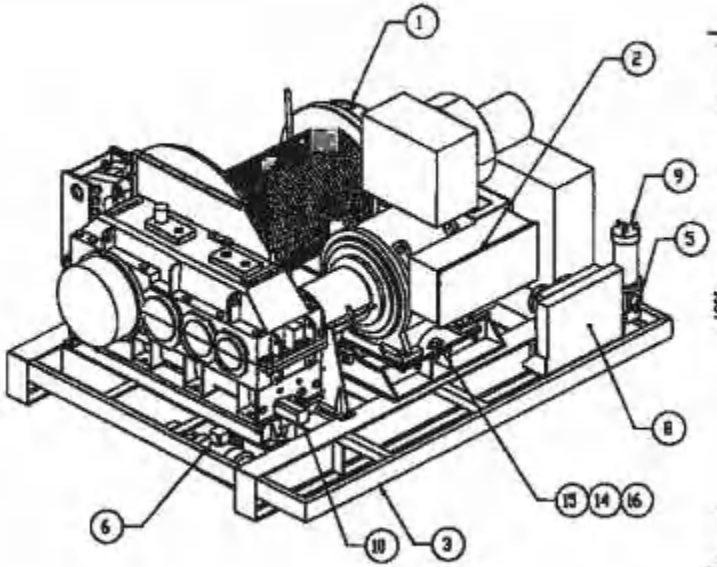

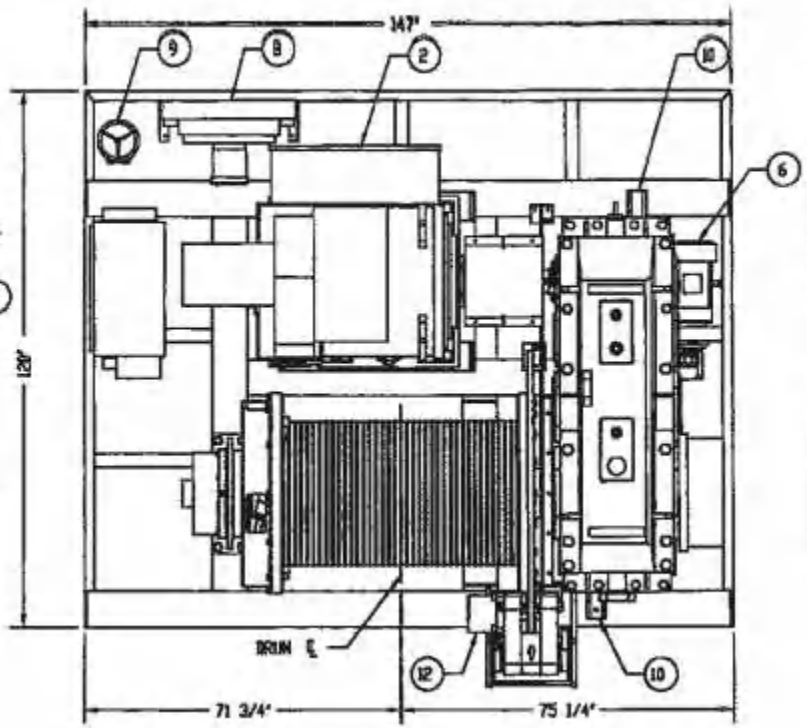

ITEM NO.	PART NUMBER	DESCRIPTION	QTY
1	D03-4203-0016	DRUM SHAFT ASSY	1
2	D03-4209-0061	MOTOR ASSEMBLY	1
3	D03-4200-0009	SKID ASSEMBLY	1
4	D03-4215-0034	GUARD, COUPLING/DISC (NOT SHOWN)	1
5	D03-4210-0033	MOUNT, OIL FILTER	1
6	B03-4215-0002	PUMP-MOTOR ASSY	1
7	GBX00004379-00	GEARBOX, 9.9 : 1 RATIO, HOLLOW SHAFT, FLENDER B7	1
8	-	OIL COOLER, AKG AC-40	1
9	FLT00004324-00	OIL FILTER, DOUBLE	1
10	-	HEATER, IMMERSION	2
11	HPU00004374-00	HPU, E-BRAKE, JOHNSON INDUSTRIES HU125R	1
12	CAL00004372-00	BRAKE CALIPER, SPRING APPLIED-HYD RELEASE, LH, C BASE, JOHNSON INDUSTRIES DS2010-09	1
13	-	CLAMP, 1-1/4" WIRE ROPE, DRBIT 98	1
14	-	HEX NUT, 1-1/2-6UNC	2
15	-	CAPSCREW, 1 1/2-6UNC X 4.5" LG	2
16	-	FLAT WASHER, 1-1/2"	4
17	-	LOCKNUT, 1-8UNC, GR C, ALL METAL DEFLECTED THREAD TYPE	8
18	-	CAPSCREW, HEX HD, 1-8UNC X 4.5"LG, GR8	8
19	-	FLAT WASHER, 1"	16

© Jakarta Drilling Society 2025

Hoisting & Rotating System - Drawworks

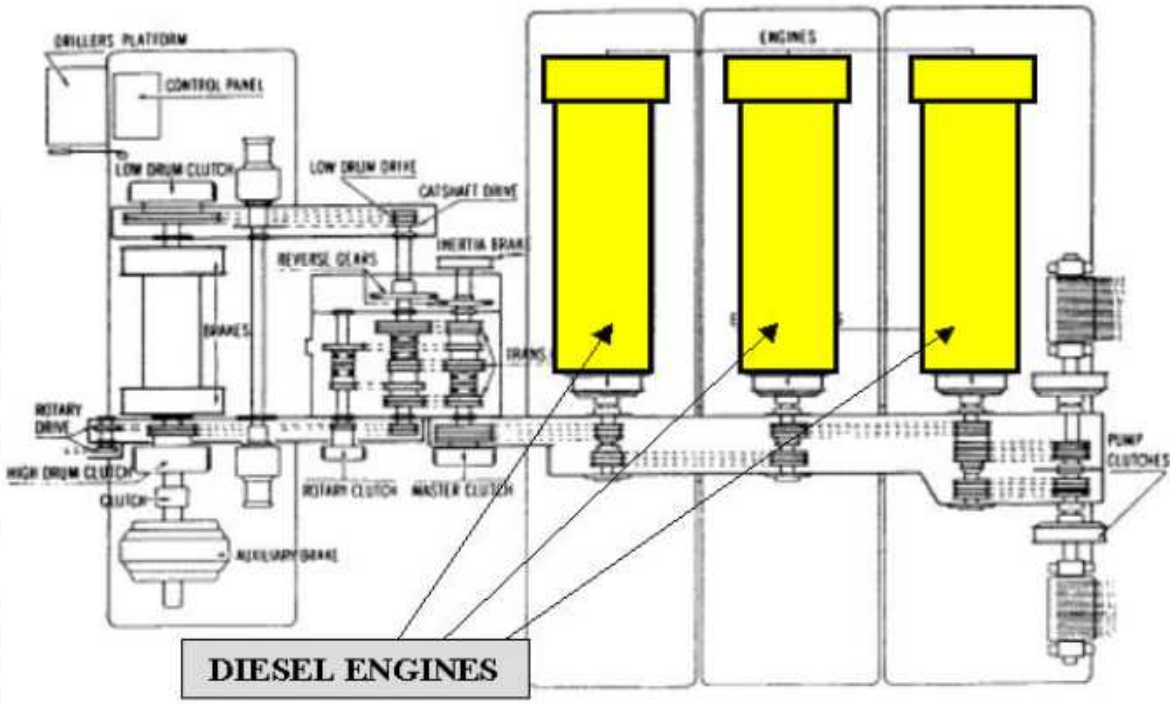

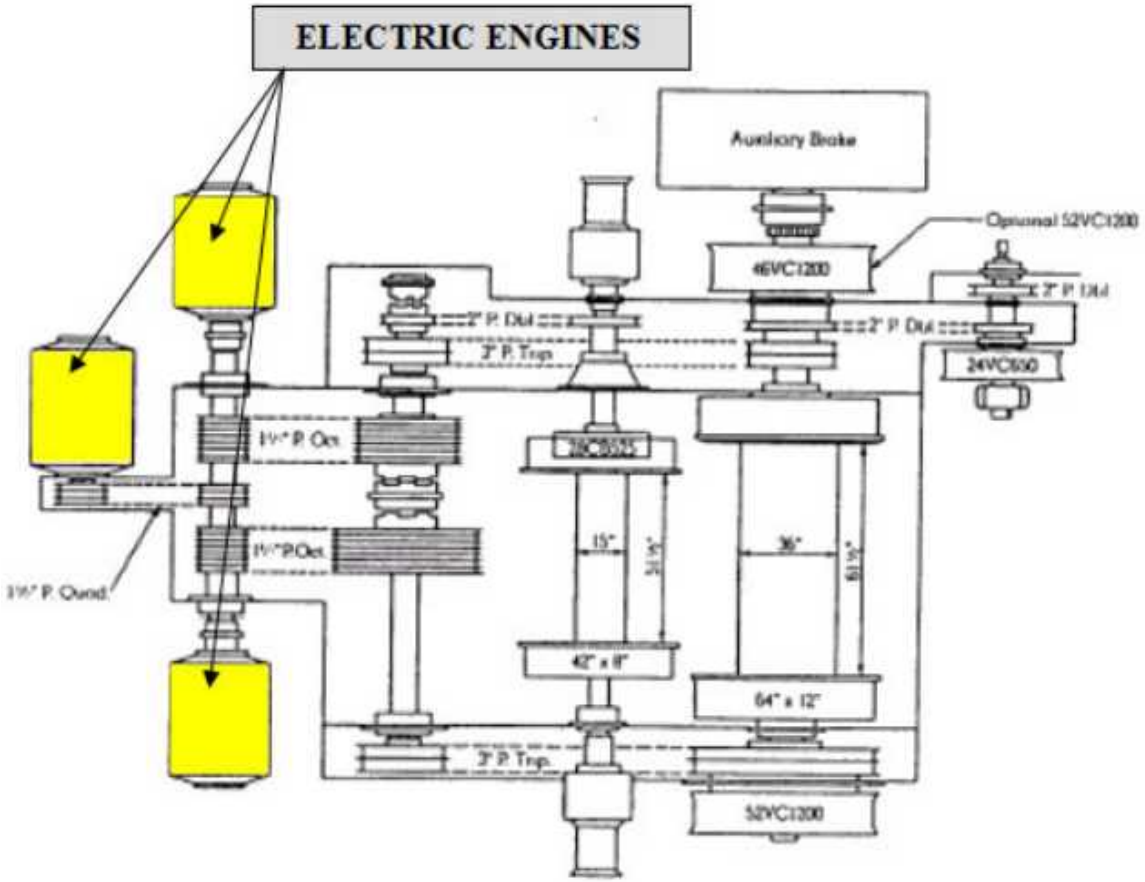

© Jakarta Drilling Society 2025

Hoisting & Rotating System - Drilling Line

Wire rope is an intricate network of close tolerance, precision made steel wires, much on the order of a machine, where each part has a job to do.

Wire Rope is composed three parts:
- the **CORE**,
- the **STRAND** and
- the **WIRE**.

API 9A defines drilling lines with abbreviations in function of:

Type of core (Steel or fiber)
Number of strands
Number of wires per strand

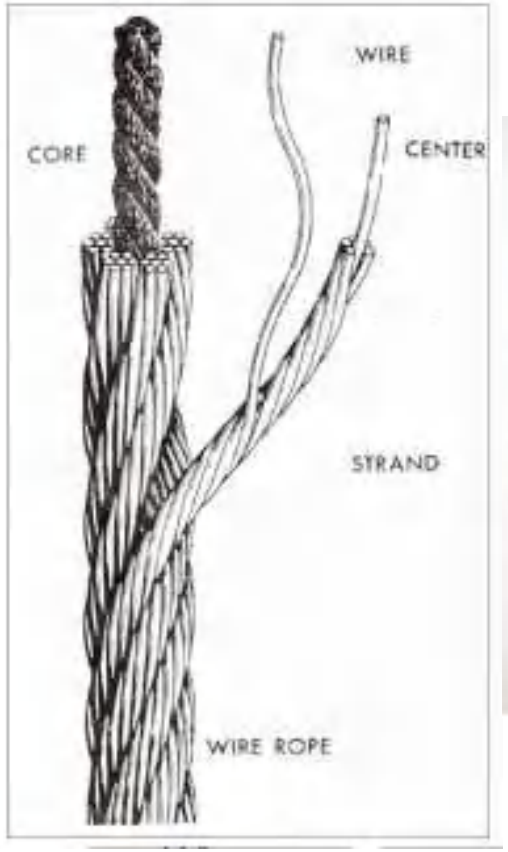

© Jakarta Drilling Society 2025

Hoisting & Rotating System - Drilling Line

Table 1—Typical Sizes and Constructions of Wire Rope For Oilfield Service

1	2	3	4
Service and Well Depth	Wire Rope in.	Diameter mm	Wire Rope Description (Regular Lay)
Drilling Lines—Coring and Slim-Hole Rotary Rigs			
Shallow	$^7/_8$, 1	22, 26	6 × 26 WS, PF, RL, IPS or EIPS, IWRC
Intermediate	1, $1^1/_8$	26, 29	6 × 19 S or 6 × 26 WS, PF, RL, IPS or EIPS, IWRC
Drilling Lines—Rotary Rigs			
Shallow	1, $1^1/_8$	26, 29	6 × 19 S or 6 × 21 S or 6 × 25 FW or FS, PF, RL, IPS or EIPS, IWRC
Intermediate	$1^1/_8$, $1^1/_4$	29, 32	
Deep	$1^1/_4$ to $1^3/_4$ incl.	32, 45	
Winch Lines—Heavy Duty	$^5/_8$ to $^7/_8$ incl.	16 to 22	6 × 26 WS or 6x31 WS, PF, RL, IPS or EIPS, IWRC
	$^7/_8$ to $1^1/_8$ incl.	22 to 29	6 × 36 WS, PF, RL, IPS or EIPS, IWRC
Offshore Anchorage Lines	$^7/_8$ to $2^3/_4$ incl.	22 to 70	6 × 19 Class, Bright or Galv., PF, RL, IPS or EIPS, IWRC
	$1^3/_8$ to $4^3/_4$ incl.	35 to 122	6 × 37 Class, Bright or Galv., PF, RL, IPS or EIPs, IWRC
	$3^3/_4$ to $4^3/_4$ incl.	96 to 122	6 × 61 Class, Bright or Galv., PF, RL, IPS or EIPs, IWRC
Mast Raising Lines[c]	$1^3/_8$ and smaller	thru 35	6 × 19 Class, PF, RL, IPS or EIPS, IWRC
	$1^1/_2$ and larger	38 and up	6 × 37 Class, PF, RL, IPS or EIPS, IWRC
Guideline Tensioner Line	$^3/_4$	19	6 × 25 FW, PF, RL, IPS or EIPS, IWRC
			Wire Rope Description (Lang Lay)
Riser Tensioner Lines	$1^1/_2$, 2	38, 51	6 × 37 Class or PF, RL, IPS or EIPS, IWRC

Hoisting & Rotating System
Deadline Anchor

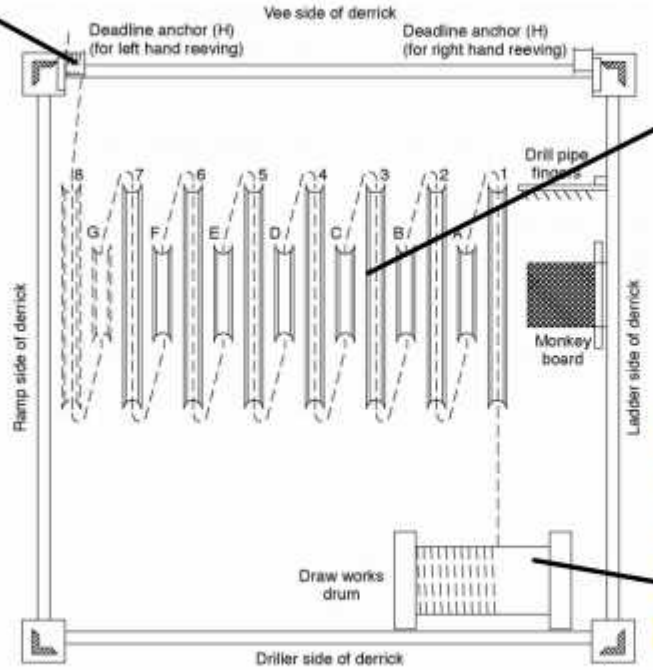

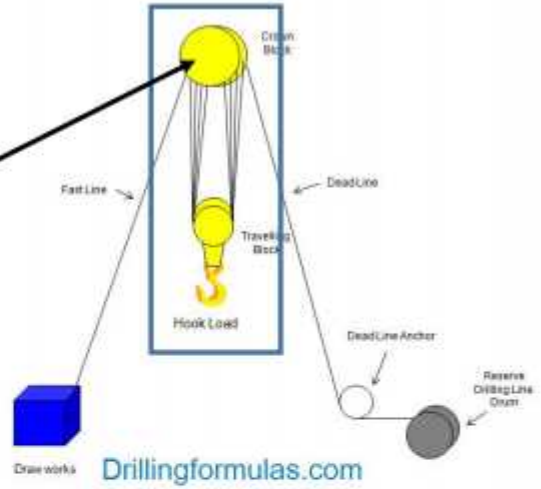

© Jakarta Drilling Society 2025

Hoisting & Rotating System - Substructure

© Jakarta Drilling Society 2025

Hoisting & Rotating System - Substructure

© Jakarta Drilling Society 2025

Hoisting & Rotating System - Substructure

© Jakarta Drilling Society 2025

Hoisting & Rotating System

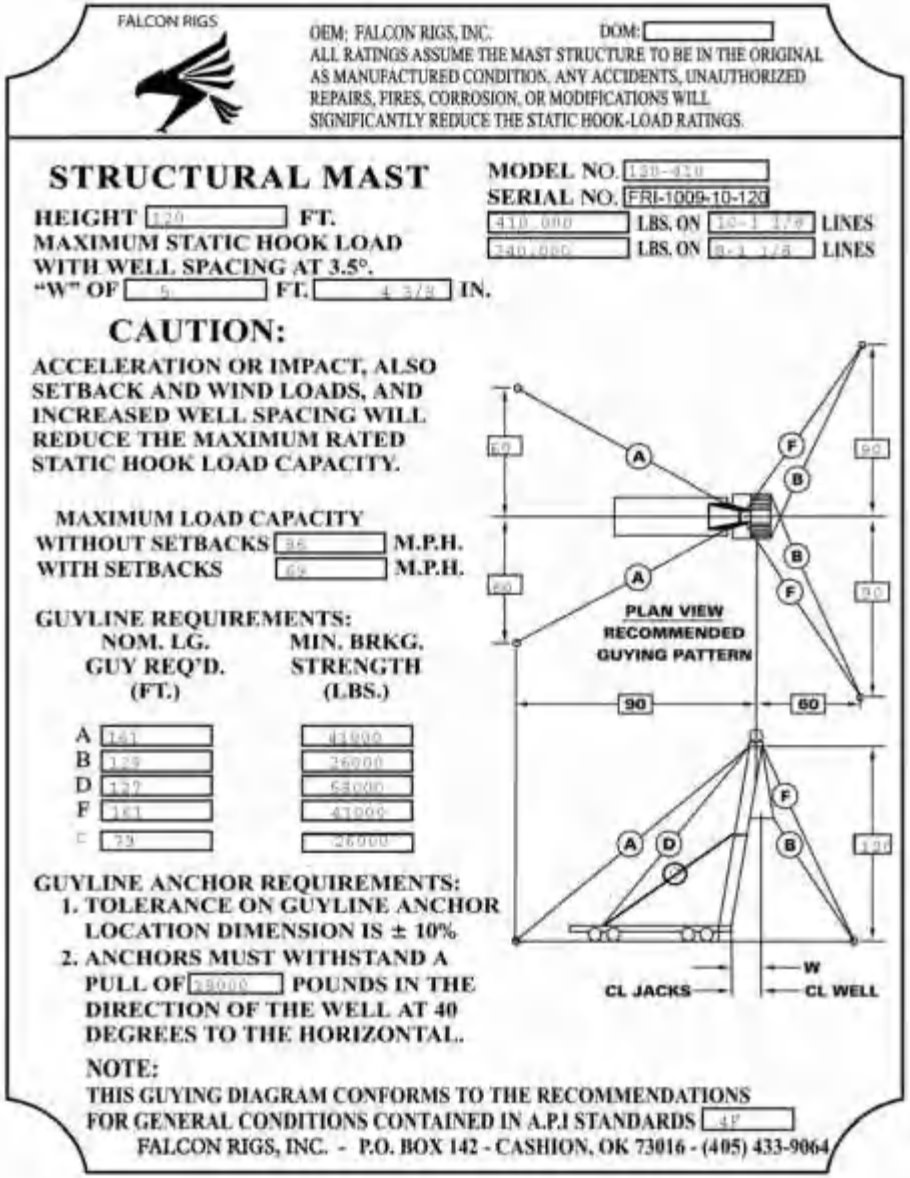

FALCON RIGS

OEM: FALCON RIGS, INC. DOM:

ALL RATINGS ASSUME THE MAST STRUCTURE TO BE IN THE ORIGINAL AS MANUFACTURED CONDITION. ANY ACCIDENTS, UNAUTHORIZED REPAIRS, FIRES, CORROSION, OR MODIFICATIONS WILL SIGNIFICANTLY REDUCE THE STATIC HOOK-LOAD RATINGS.

STRUCTURAL MAST

MODEL NO. 130-410
SERIAL NO. FRI-1009-10-120

HEIGHT 120 FT.
MAXIMUM STATIC HOOK LOAD WITH WELL SPACING AT 3.5°.
410,000 LBS. ON 10-1 1/8 LINES
340,000 LBS. ON 8-1 1/8 LINES
"W" OF 5 FT. 4 3/8 IN.

CAUTION:

ACCELERATION OR IMPACT, ALSO SETBACK AND WIND LOADS, AND INCREASED WELL SPACING WILL REDUCE THE MAXIMUM RATED STATIC HOOK LOAD CAPACITY.

MAXIMUM LOAD CAPACITY
WITHOUT SETBACKS 86 M.P.H.
WITH SETBACKS 69 M.P.H.

GUYLINE REQUIREMENTS:

	NOM. LG. GUY REQ'D. (FT.)	MIN. BRKG. STRENGTH (LBS.)
A	161	41000
B	129	26000
D	127	68000
F	161	41000
C	73	26000

GUYLINE ANCHOR REQUIREMENTS:
1. TOLERANCE ON GUYLINE ANCHOR LOCATION DIMENSION IS ± 10%
2. ANCHORS MUST WITHSTAND A PULL OF 38000 POUNDS IN THE DIRECTION OF THE WELL AT 40 DEGREES TO THE HORIZONTAL.

NOTE:
THIS GUYING DIAGRAM CONFORMS TO THE RECOMMENDATIONS FOR GENERAL CONDITIONS CONTAINED IN A.P.I STANDARDS 4F

FALCON RIGS, INC. - P.O. BOX 142 - CASHION, OK 73016 - (405) 433-9064

© Jakarta Drilling Society 2025

Hoisting & Rotating System

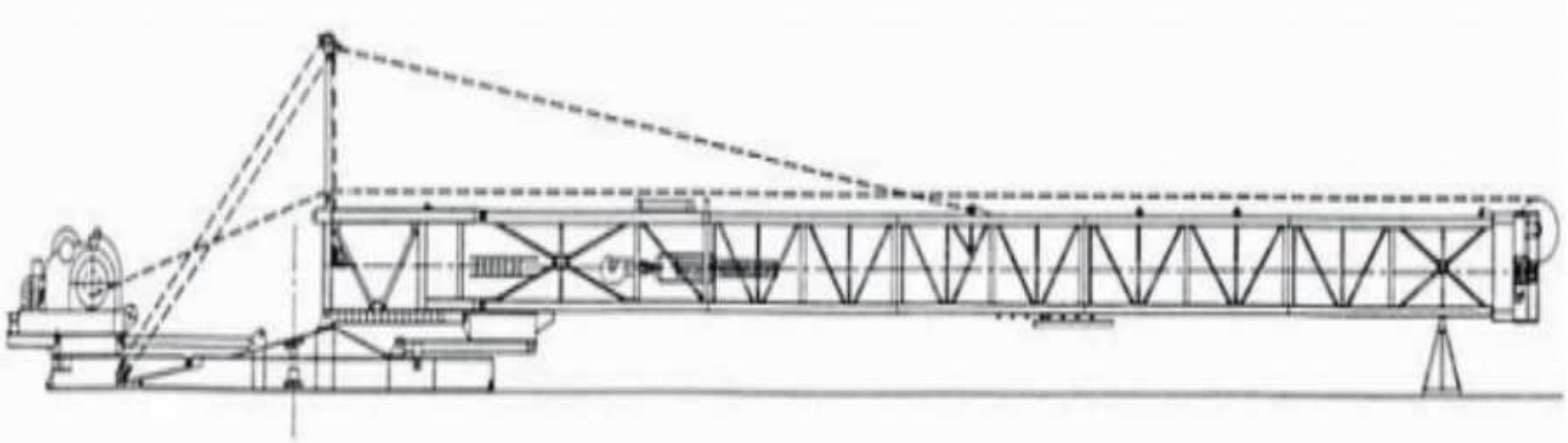

© Jakarta Drilling Society 2025

Hoisting & Rotating System

- Beginning

- After 3 minutes

- After 6 minutes

- After 9 minutes

Jakarta Drilling Society
© Jakarta Drilling Society 2025

Drilling System & Rig Components

Mud Circulating System

© Jakarta Drilling Society 2025

Jakarta Drilling Society

Mud Circulating System

1. **Mud Tanks**
   - Shaker Tank
   - Intermediate Tank
   - Active Tank
   - Reserve Tank
2. Mud Mixing Hopper
3. **Triplex Mud Pumps**
4. **Mud Recycle Equipment**
   - Shale Shakers
   - Desander & Desilter
   - Degasser
5. **Surface High Pressure Line**
   - Standpipe, Manifold & Rotary Hose

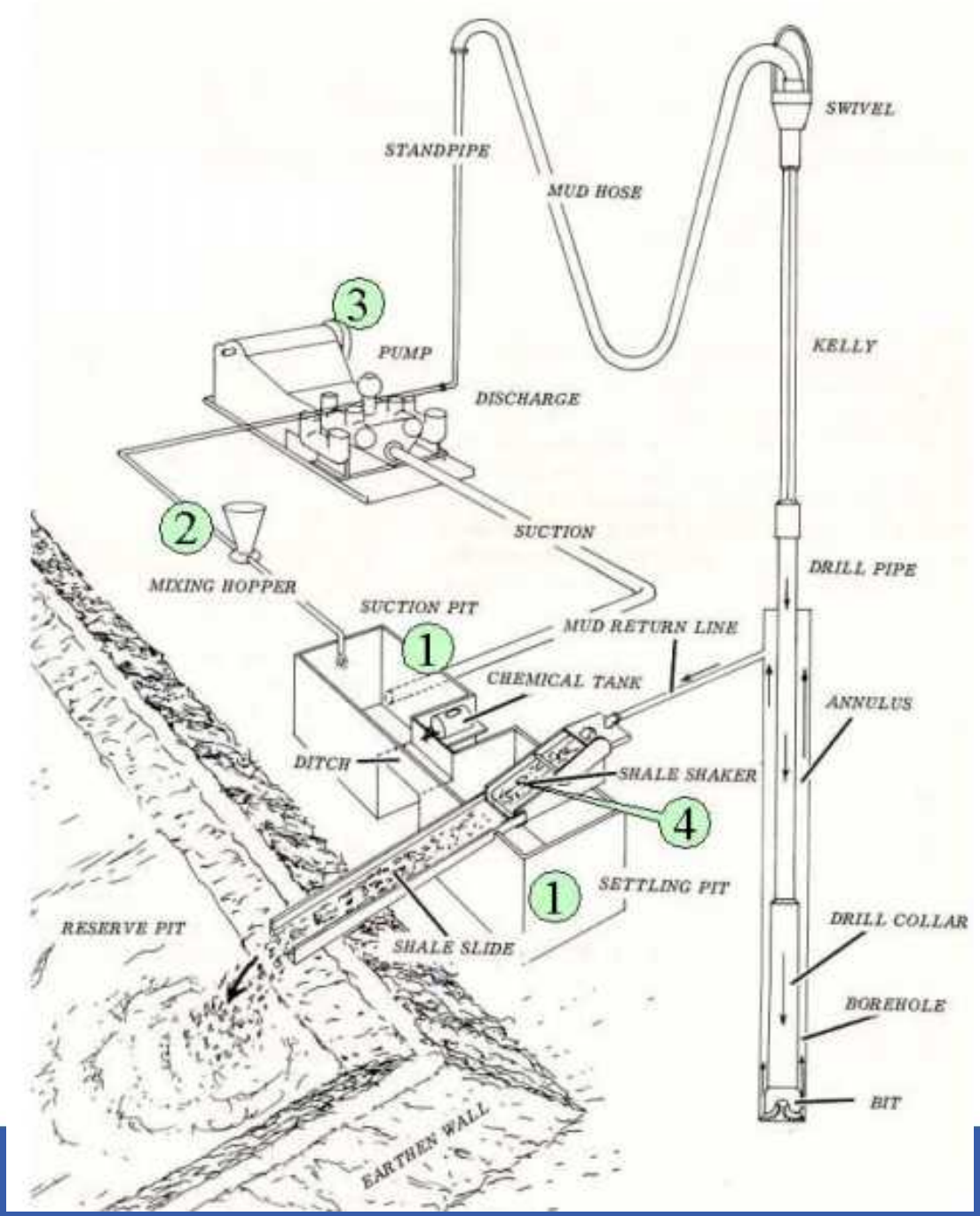

© Jakarta Drilling Society 2025

Mud Circulating System - Mud Tanks

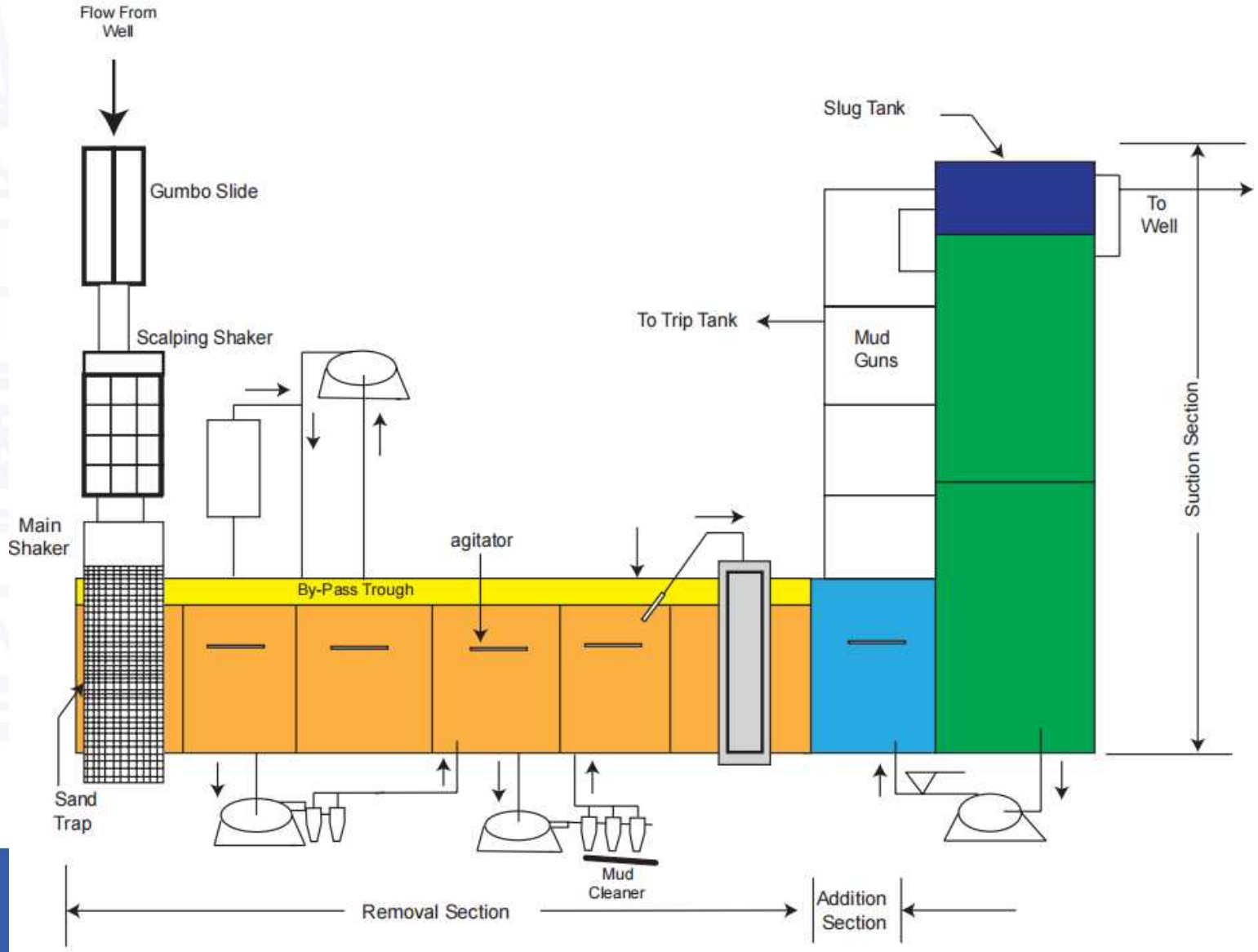

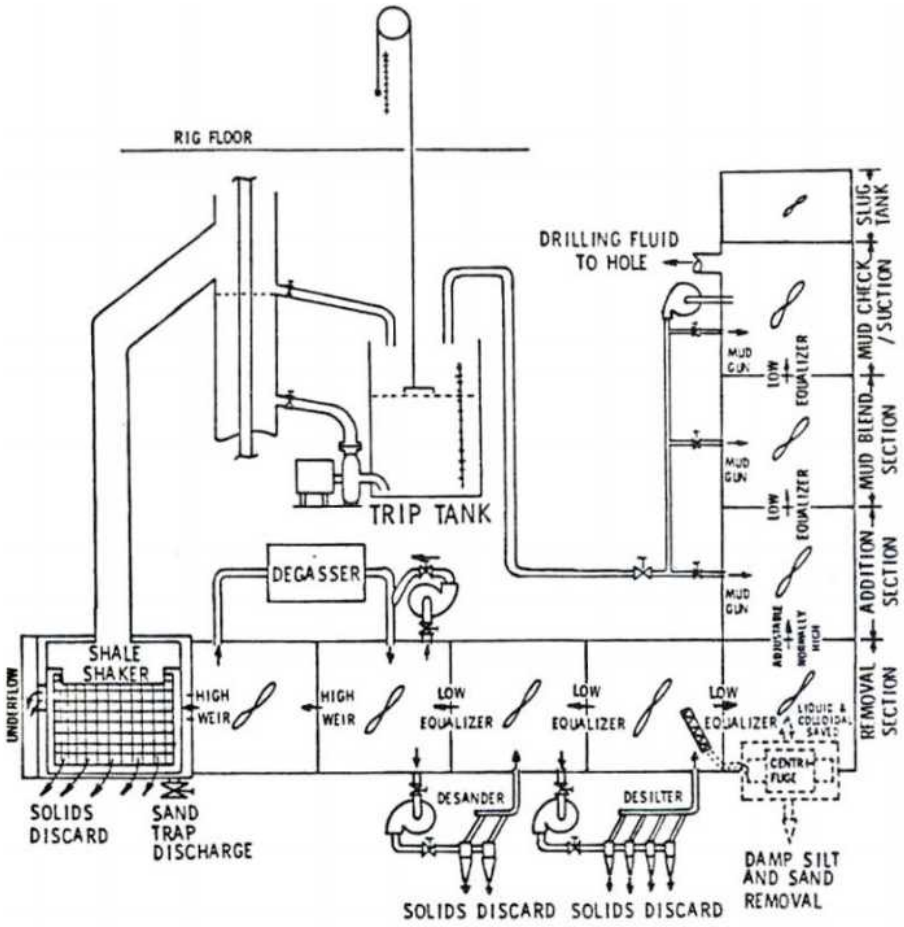

© Jakarta Drilling Society 2025

Mud Circulating System - Mud Tanks

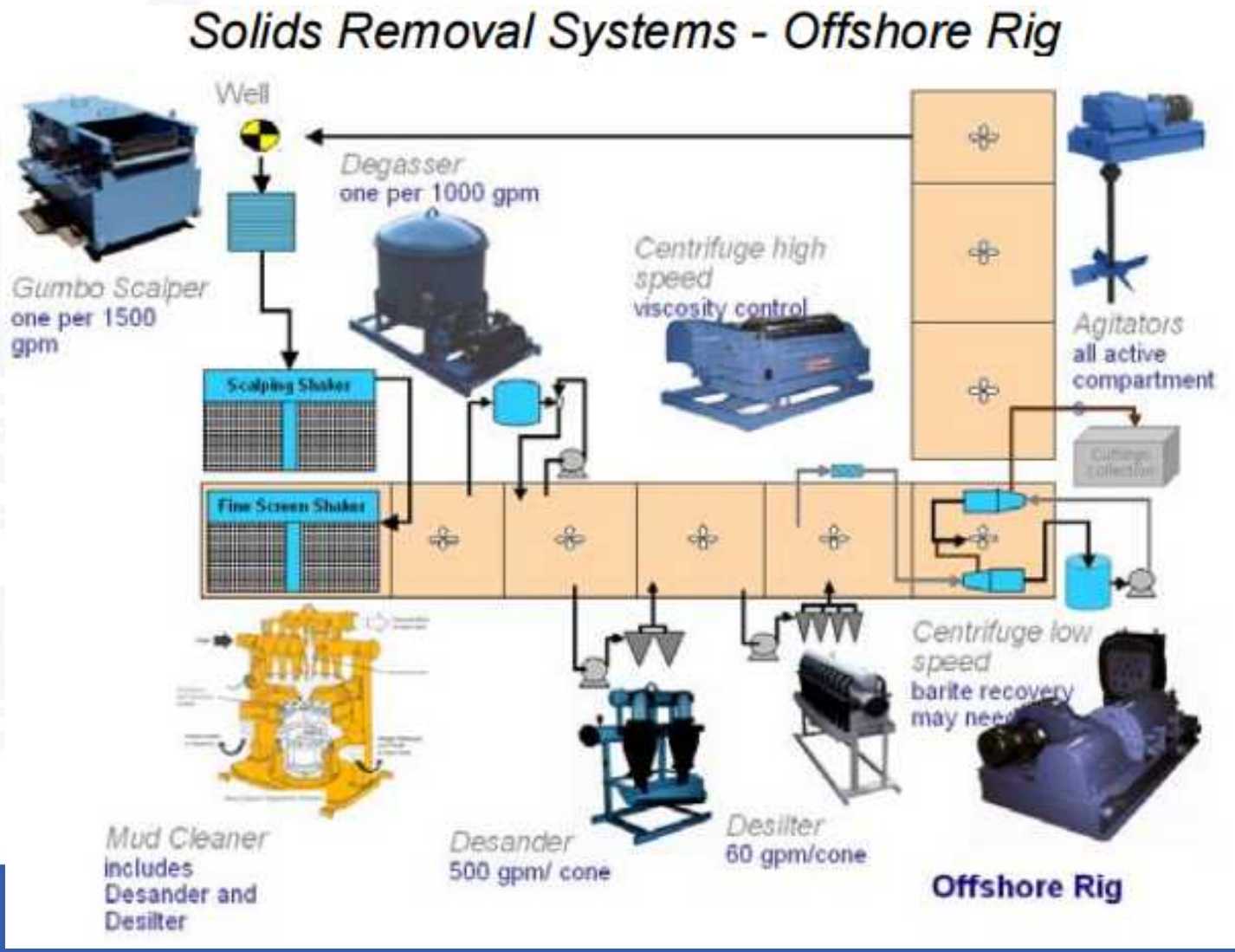

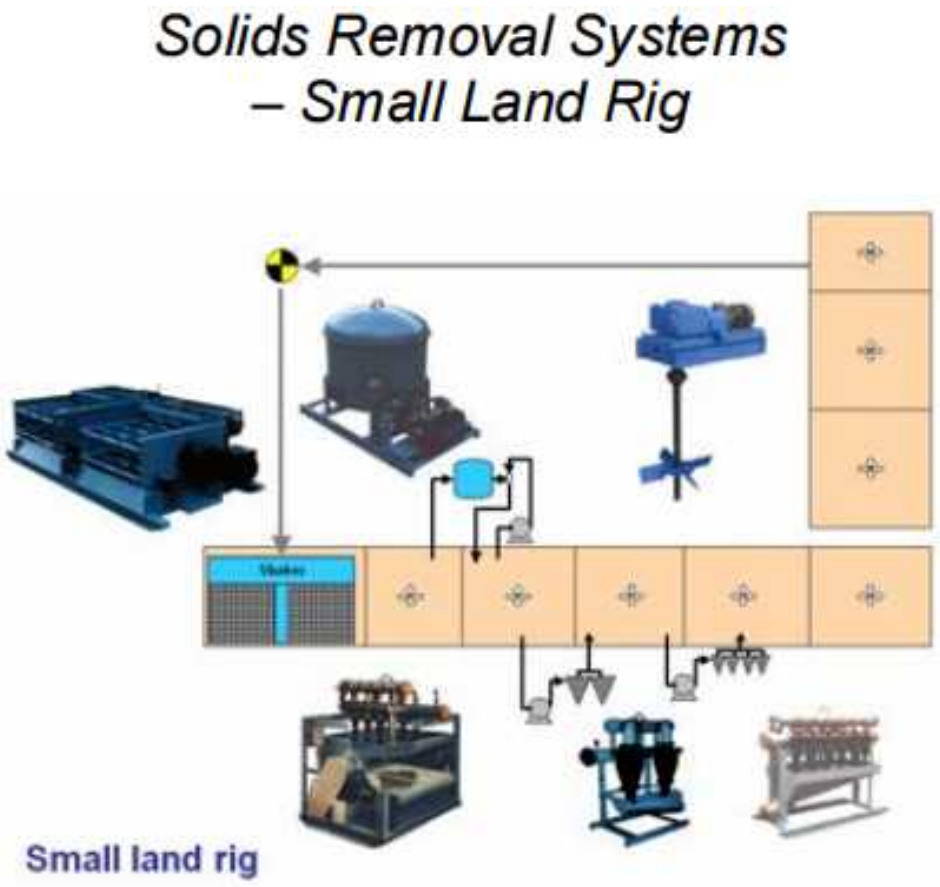

© Jakarta Drilling Society 2025

Mud Circulating System - Mud Tanks

© Jakarta Drilling Society 2025

Mud Circulating System - Triplex Mud Pump

Cylinder					Displacement				Maximum Pressure		Piston Load				
Qty.	Diameter Inches	Diameter mm	Stroke Inches	Stroke mm	Gal. Per Rev.	Liter Per Rev.	Gal. Per Min.	Liter Per Min.	PSI	kg/cm²	Pounds	kg	Pump RPM	Jack shaft RPM	Input HP
MODEL PZG – 550 H.P. TRIPLEX MUD PUMP															
3	7	177.8	7	177.8	3.5	13.25	507	1919	1673	117.6	64,380	29 202	145	670	550
3	6–1/2	165.1	7	177.8	3.02	11.43	437	1654	1940	136.4	64,380	29 202	145	670	550
3	6	152.4	7	177.8	2.57	9.73	373	1412	2277	160.1	64,380	29 202	145	670	550
3	5–1/2	139.7	7	177.8	2.16	8.18	313	1185	2710	190.5	64,380	29 202	145	670	550
3	5	127.0	7	177.8	1.79	6.78	259	980	3279	230.5	64,380	29 202	145	670	550
3	4–1/2	114.3	7	177.8	1.45	5.49	210	795	4048	284.6	64,380	29 202	145	670	550

Weight Complete Pump ..... 17,410 Lbs. (7897.04 kg)
Gear Ratio ..... 4.625 to 1
Length Over Skid ..... 120 Inches (3048.0 mm)
Width Over Skid ..... 50 Inches (1270.0 mm)
Width Over Jackshaft ..... 80.20 Inches (2037.08 mm)

Qty.	Diameter Inches	Diameter mm	Stroke Inches	Stroke mm	Gal. Per Rev.	Liter Per Rev.	Gal. Per Min.	Liter Per Min.	PSI	kg/cm²	Pounds	kg	Pump RPM	Jack shaft RPM	Input HP
MODEL PZH – 750 H.P. TRIPLEX MUD PUMP															
3	7	177.8	8	203.2	4.00	15.14	580	2196	1996	140.3	76,817	34 844	145	652	750
3	6–1/2	165.1	8	203.2	3.45	13.06	500	1893	2315	162.8	76,817	34 844	145	652	750
3	6–1/4	158.8	8	203.2	3.19	12.08	462	1749	2504	176.0	76,817	34 844	145	652	750
3	6	152.4	8	203.2	2.94	11.13	426	1613	2717	191.0	76,817	34 844	145	652	750
3	5–1/2	139.7	8	203.2	2.47	9.35	358	1355	3233	227.3	76,817	34 844	145	652	750
3	5	127.0	8	203.2	2.04	7.72	296	1120	3912	275.1	76,817	34 844	145	652	750
3	4–1/2	114.3	8	203.2	1.65	6.25	240	908	4830	339.6	76,817	34 844	145	652	750
3	4	101.6	8	203.2	1.31	4.96	189	715	5000*	351.5*	62,832*	28 501*	145	652	613*

Weight Complete Pump (w/Cast Frame) ..... 21,650 Lbs. (9820.27 kg)
Weight Complete Pump (w/Fabricated Frame)(Also Includes New Cylinders) ..... 22,035 Lbs. (9994.9 kg)
Gear Ratio ..... 4.5 to 1
Length Over Skid ..... 193.62 Inches (4917.9 mm)
Width Over Skid ..... 89 Inches (2260.6 mm)

Cylinder					Displacement				Maximum Pressure		Piston Load				
Qty.	Diameter Inches	Diameter mm	Stroke Inches	Stroke mm	Gal. Per Rev.	Liter Per Rev.	Gal. Per Min.	Liter Per Min.	PSI	kg/cm²	Pounds	kg	Pump RPM	Jack shaft RPM	Input HP
MODEL PZJ – 1000 H.P. TRIPLEX MUD PUMP															
3	7	177.8	9	228.6	4.50	17.03	585	2215	2639	185.5	101,548	46 061	130	582	1000
3	6–1/2	165.1	9	228.6	3.88	14.69	504	1908	3060	215.1	101,548	46 061	130	582	1000
3	6–1/4	158.8	9	228.6	3.59	13.59	466	1764	3310	232.7	101,548	46 061	130	582	1000
3	6	152.4	9	228.6	3.30	12.53	430	1628	3592	252.5	101,548	46 061	130	582	1000
3	5–1/2	139.7	9	228.6	2.78	10.52	361	1367	4274	300.5	101,548	46 061	130	582	1000
3	5	127.0	9	228.6	2.29	8.70	298	1128	5000*	351.5*	98,175*	44 532*	130	582	967*
3	4–1/2	114.3	9	228.6	1.86	7.04	242	916	5000*	351.5*	79,522*	36 071*	130	582	783*
3	4	101.6	9	228.6	1.46	5.53	191	723	5000*	351.5*	62,832*	28 501*	130	582	619

Weight Complete Pump (w/Cast Frame) ..... 26,500 Lbs. (12 020.19 kg)
Weight Complete Pump (w Fabricated Frame) ..... 25,520 Lbs. (11 575.67 kg)
Gear Ratio ..... 4.48 to 1
Length Over Skid ..... 224.12 Inches (5692.648 mm)
Width Over Skid ..... 96 Inches (2438.4 mm)

Qty.	Diameter Inches	Diameter mm	Stroke Inches	Stroke mm	Gal. Per Rev.	Liter Per Rev.	Gal. Per Min.	Liter Per Min.	PSI	kg/cm²	Pounds	kg	Pump RPM	Jack shaft RPM	Input HP
MODEL PZK – 1350 H.P. TRIPLEX MUD PUMP															
3	7	177.8	10	254.0	5.00	18.93	575	2177	3624	254.8	139,474	63 264	115	504	1350
3	6–1/2	165.1	10	264.0	4.31	16.31	496	1878	4203	295.5	139,474	63 264	115	504	1350
3	6	152.4	10	254.0	3.67	13.89	422	1597	4933	346.8	139,474	63 264	115	504	1350
3	5–1/2	139.7	10	254.0	3.09	11.70	355	1344	5000*	351.5*	118,791*	53 884*	115	504	1150*

Weight Complete Pump (w/Cast Frame) ..... 40,500 Lbs. (18 370.48 kg)
Weight Complete Pump (w/Fabricated Frame) ..... 41,870 Lbs. (18 991.9 kg)
Gear Ratio ..... 4.38 to 1
Length Over Skid ..... 222.5 Inches (5651.5 mm)
Width Over Skid ..... 96 Inches (2438.4 mm)
Width Over Jackshaft ..... 104 Inches (2641.6 mm)

Jakarta Drilling Society

© Jakarta Drilling Society 2025

Mud Circulating System - Triplex Mud Pump

Cylinder					Displacement				Maximum Pressure		Piston Load		Pump RPM	Jack shaft RPM	Input HP
Qty.	Diameter Inches	Diameter mm	Stroke Inches	Stroke mm	Gal. Per Rev.	Liter Per Rev.	Gal. Per Min.	Liter Per Min.	PSI	kg/cm^2	Pounds	kg			
MODEL PZL – 1600 H.P. TRIPLEX MUD PUMP															
3	7	177.8	11	279.4	5.50	20.82	632	2392	3905	274.5	150,275	68 164	115	504	1600
3	6–1/2	165.1	11	279.4	4.74	17.94	545	2063	4529	318.4	150,275	68 164	115	504	1600
3	6	152.4	11	279.4	4.04	15.29	465	1760	5000*	351.5	141,372*	64 126*	115	504	1505*
3	5–1/2	139.7	11	279.4	3.40	12.83	390	1476	5000*	351.5*	118,791*	53 884*	115	504	1265*

Weight Complete Pump (w/Cast Frame) ..... 40,500 Lbs. (18 370.48 kg)
Weight Complete Pump (w/Fabricated Frame) ..... 41,870 Lbs. (18 991.9 kg)
Gear Ratio ..... 4.38 to 1
Length Over Skid ..... 222.5 Inches (5651.5 mm)
Width Over Skid ..... 96 Inches (2438.4 mm)
Width Over Jackshaft ..... 104 Inches (2641.6 mm)

© Jakarta Drilling Society 2025

Mud Circulating System - Triplex Mud Pump

© Jakarta Drilling Society 2025

Mud Circulating System - Triplex Mud Pump

© Jakarta Drilling Society 2025

Mud Circulating System - Triplex Mud Pump

PISTON ROD & COUPLING
(General Service)

Ref. No.	Name of Part	Qty.	Part No.
1	COUPLING–PLUNGER ASSEMBLY, Includes Reference Numbers 2 & 3	3	200PZL4065
2	SCREW, Coupling	12	655EE22S
3	LOCKNUT, Coupling Screw	12	50AW35
4	PISTON ROD, Includes Reference Number 5	3	200PZL060
5	LOCKNUT	3	50V14
6	CLAMP–LINER	3	200PZL455
7	GASKET, Liner to Cylinder	3	25AT37
*	WRENCH	1	99L11

* Not shown.

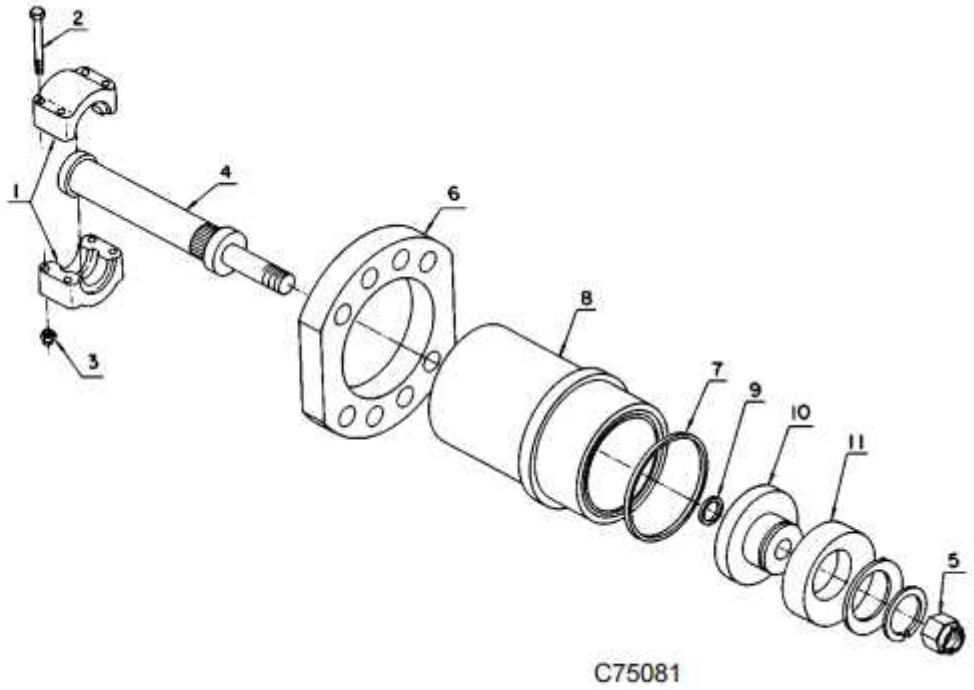

© Jakarta Drilling Society 2025

Mud Circulating System - Triplex Mud Pump

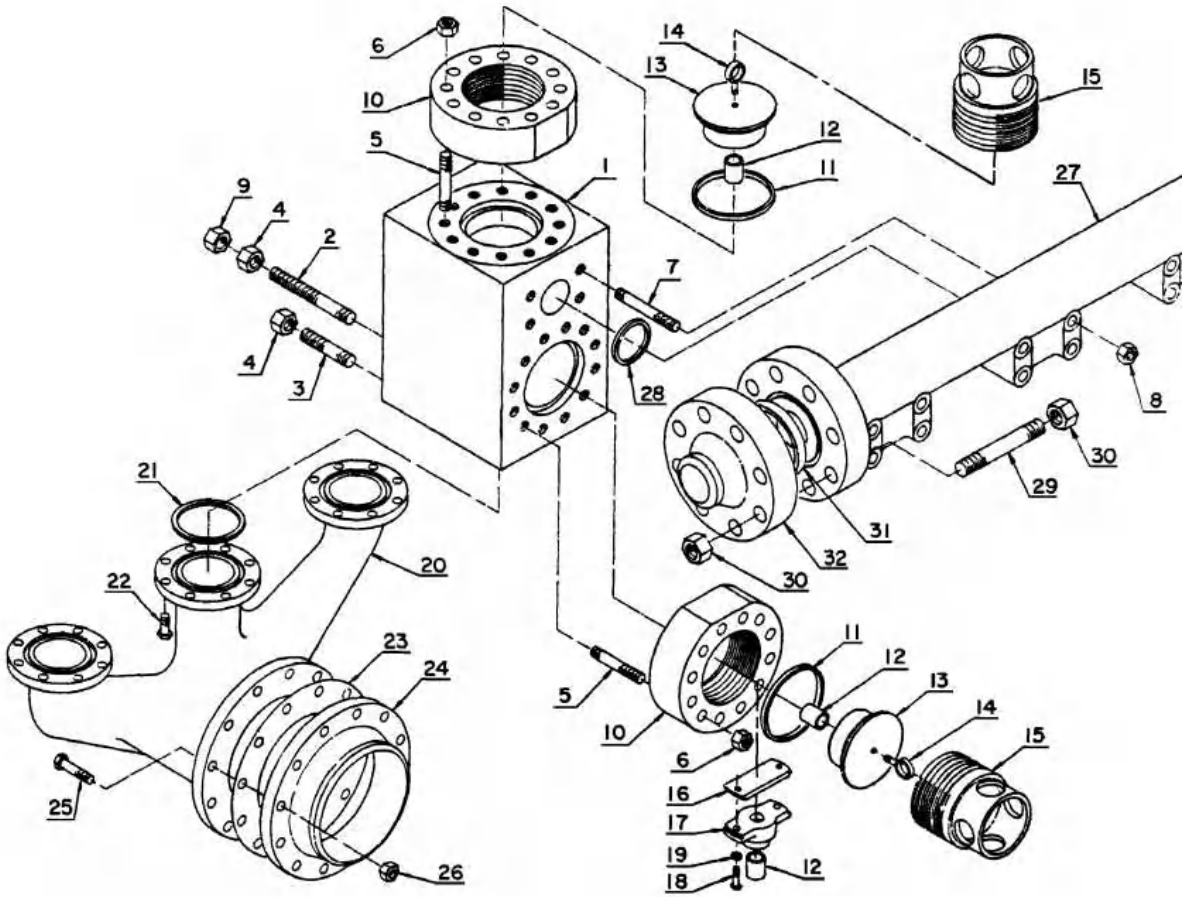

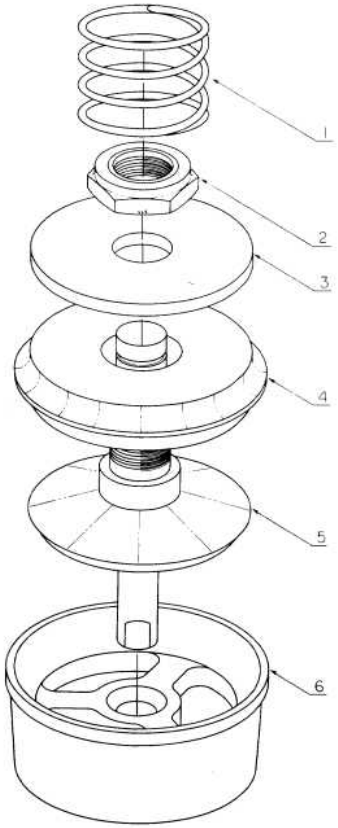

© Jakarta Drilling Society 2025

Mud Circulating System
Mud Recycle Equipments

© Jakarta Drilling Society 2025

Mud Circulating System
Mud Recycle Equipments

© Jakarta Drilling Society 2025

Mud Circulating System
Mud Recycle Equipments

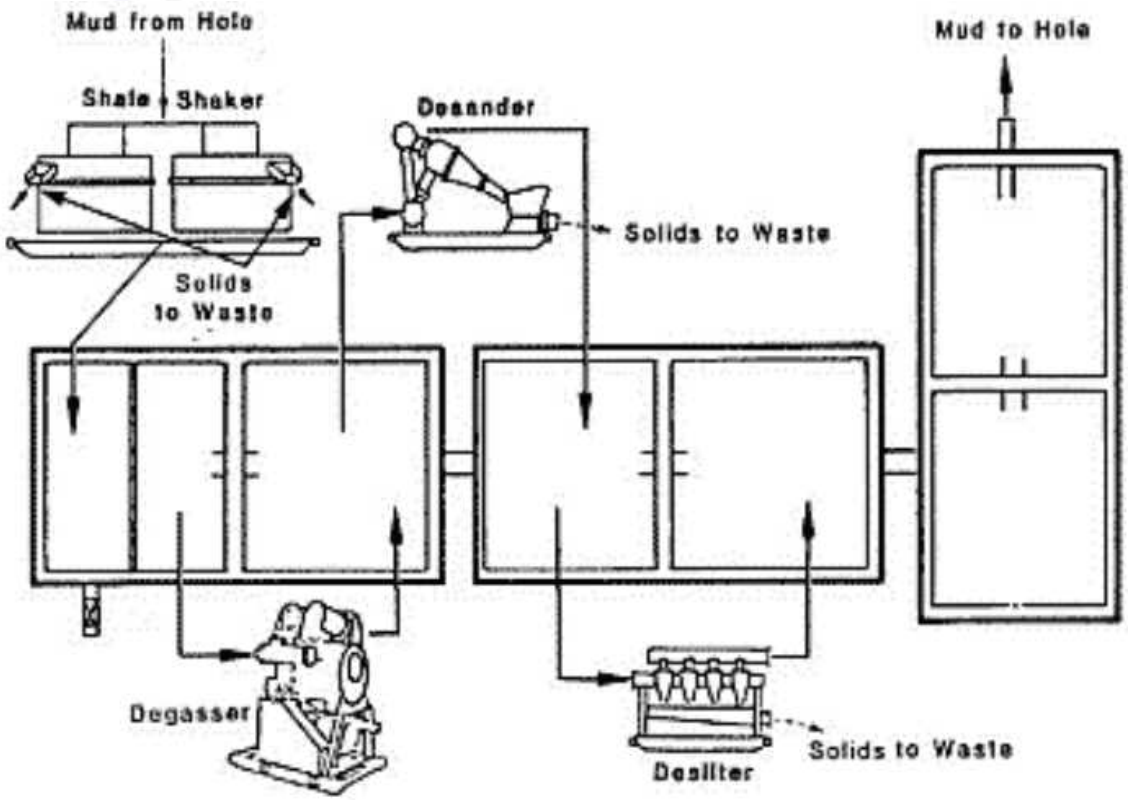

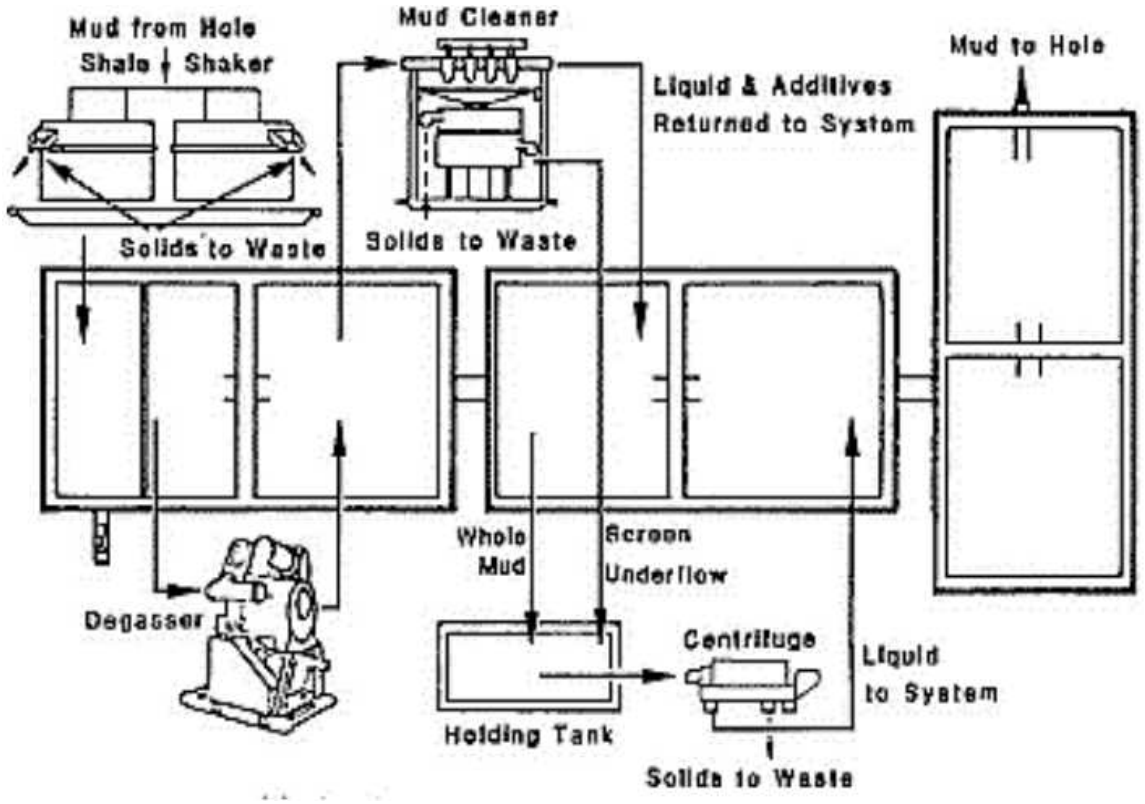

© Jakarta Drilling Society 2025

Mud Circulating System
Mud Recycle Equipments

© Jakarta Drilling Society 2025

Mud Circulating System
Mud Recycle Equipments

Table FP-1: Partial List of ASTM E-11 Wire Cloth Standard Test Sieves				
Standard mm	API number	Permissible variation+/-mm	Maximum openings for 5% mm	Maximum individual opening mm
2.36	8	0.080	2.515	2.600
2.00	10	0.070	2.135	2.215
1.70	12	0.060	1.820	1.890
1.890	16	0.045	1.270	1.330
Microns		Microns	Microns	Microns
850	20	35	925	970
710	25	30	775	819
600	30	25	660	695
500	35	20	550	585
425	40	19	471	502
355	45	16	396	426
300	50	14	337	353
250	60	12	283	306
212	70	10	242	263
180	80	9	207	227
150	100	8	175	192
125	120	7	147	163
106	140	6	126	141
90	170	5	108	122
75	200	5	91	103
63	230	4	77	89
53	270	4	65	89
45	325	3	57	76
38	400	3	48	66

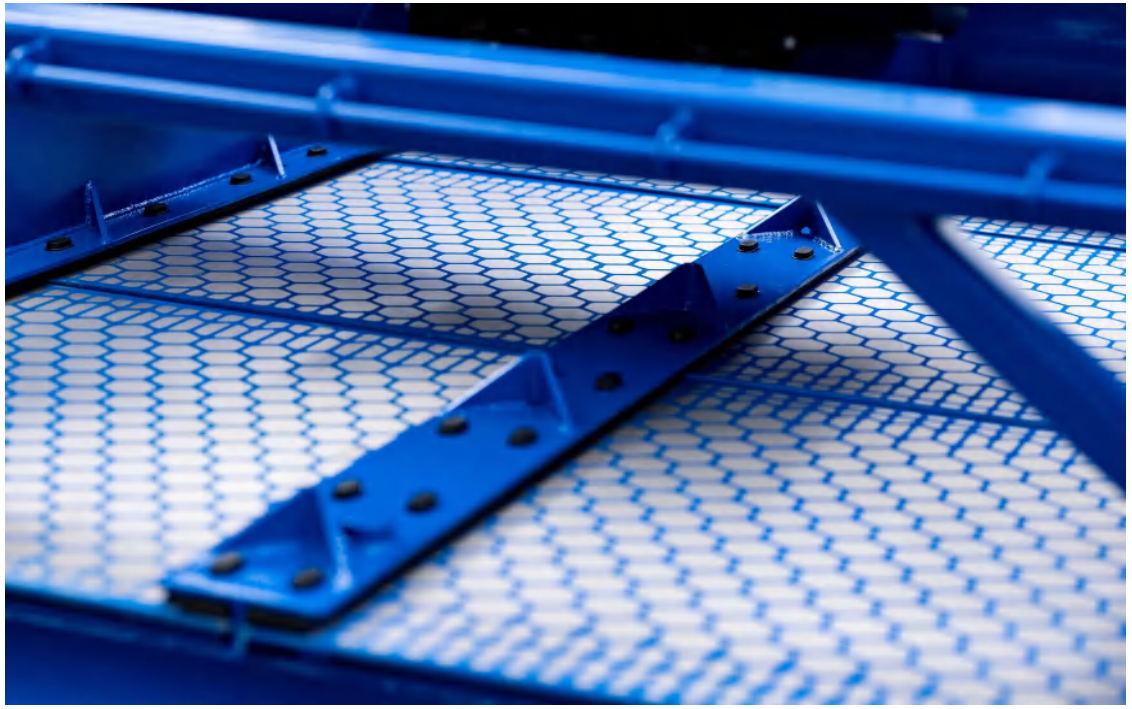

© Jakarta Drilling Society 2025

Mud Circulating System
Mud Recycle Equipments

Table FP-2: Typical cyclone capacities and feed pressures

Cone Size (ID)	4 in.	5 in.	6 in.	8 in.	10 in.	12 in.
Capacity (GPM)	50-75	70-80	100-150	150-250	400-500	400-500
Feed Pressure (PSI)	30-40	30-40	30-40	25-30	20-30	20-30
Cut Point (Microns)	15-20	20-25	25-30	30-40	30-40	40-60

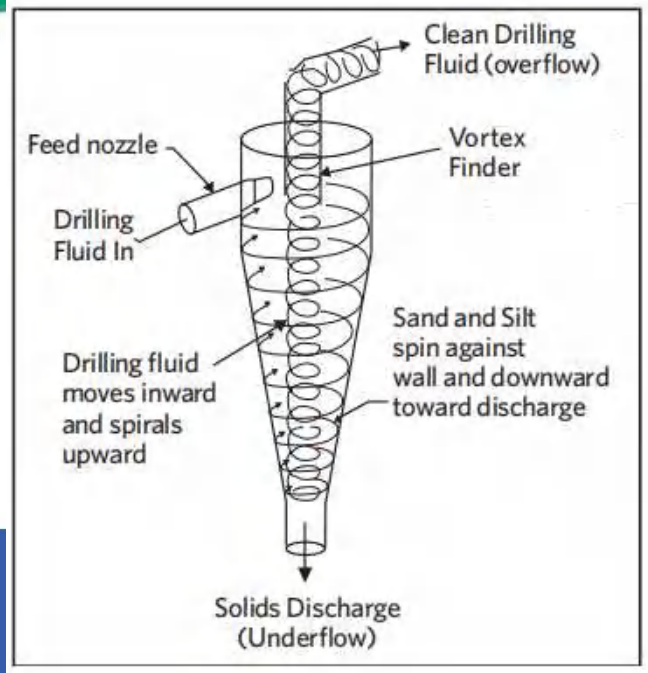

Mud Circulating System
Mud Recycle Equipments

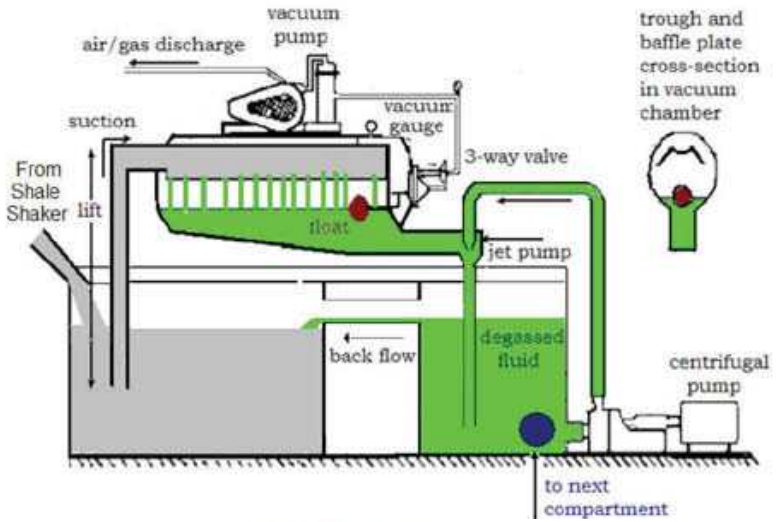

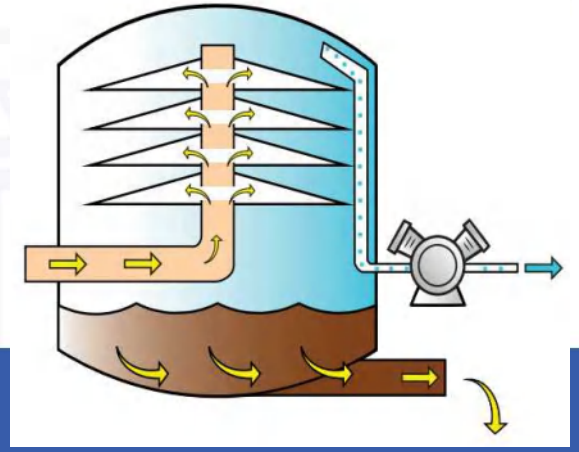

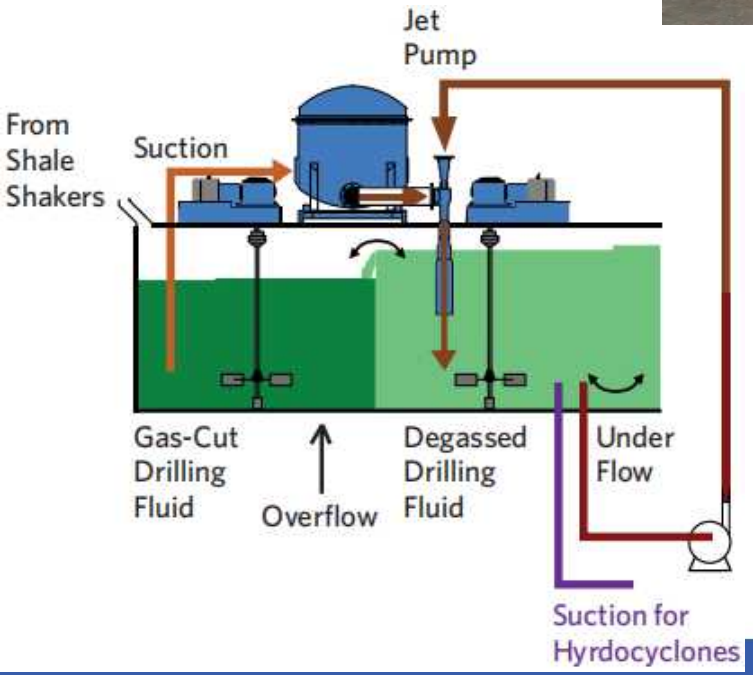

JDS
Jakarta Drilling Society

© Jakarta Drilling Society 2025

Mud Circulating System
Mud Recycle Equipments

DE-7200 with B1 Control Cabinet

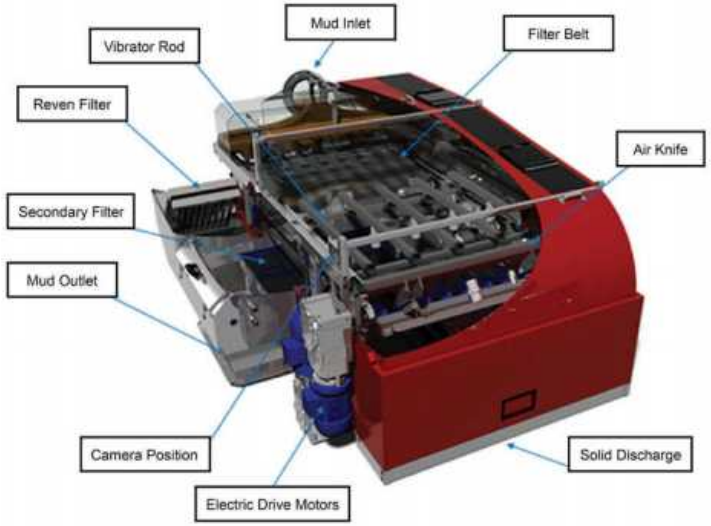

Figure FP-25: Cutaway shows key components of a shaker. Courtesy Cubility.

© Jakarta Drilling Society 2025

Mud Circulating System
Standpipe & Rotary Drilling Hose

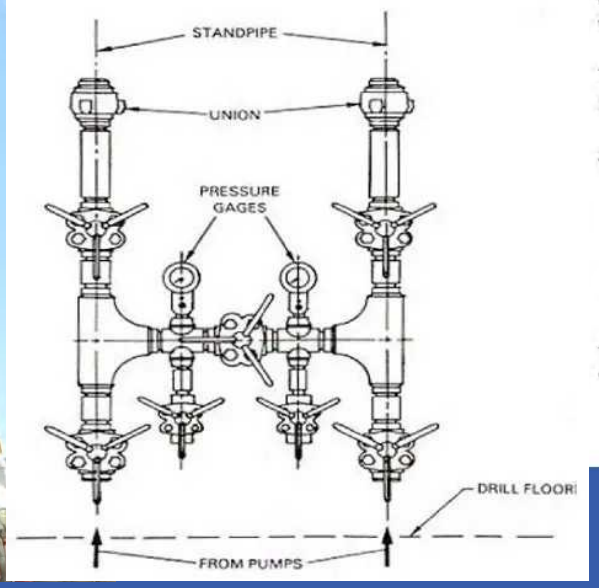

Safety Alert

ALERT 98-1

High Pressure Lines and Hammer Unions

A drill crew was drilling ahead when a third party pressure sensor attached to the stand pipe stopped working. The sensor was made up to the standpipe with a size "602" hammer union rated at 6,000 psi working pressure. The crew removed the faulty sensor and replaced it. The hammer union on the new pressure sensor had a size "1502" wing nut rated to 15,000 psi. The "1502" female threads in the wing nut appeared completely made up to the "602" male threads coming off the standpipe.

The mud pumps were engaged and drilling operations resumed. As the mud pump pressure increased, no leaks were detected. Then, at approximately 2,000 psi, the pressure sensor and "1502" wing nut were blown off the standpipe. Fortunately, no one was struck by the projectile or the ensuing stream of drilling fluid. Approximately one barrel of oil-based mud was sprayed on the rig floor before the mud pumps were secured and the standpipe was isolated.

The mishap was considered an environmental incident and a significant near miss, which could have resulted in serious injury or death.

After investigating the incident, operator offered the following suggestions:

1. Only unions with like threads should be made up. Although mismatched threads may appear made up (as they did in this case), only a portion of the threads are engaged and the union will fail under pressure.
2. Both halves of the union should have the same pressure rating.
3. All pressure lines should be inspected to ensure there are no mismatched unions.

This material is presented for information purposes only. Managers & supervisors should evaluate this information to determine if it can be applied to their own situations and practices. From : http://iadc.org/alerts/sa98-1.htm

Jakarta Drilling Society

© Jakarta Drilling Society 2025

Drilling System & Rig Components

Power Generation & Control System

© Jakarta Drilling Society 2025

Jakarta Drilling Society

Power Generation & Control System

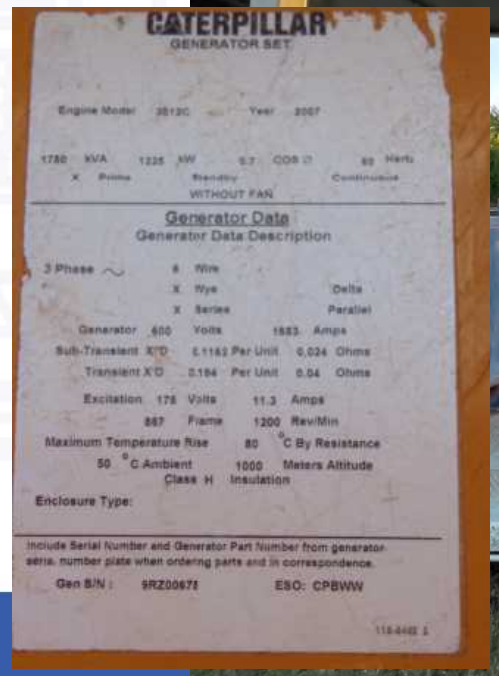

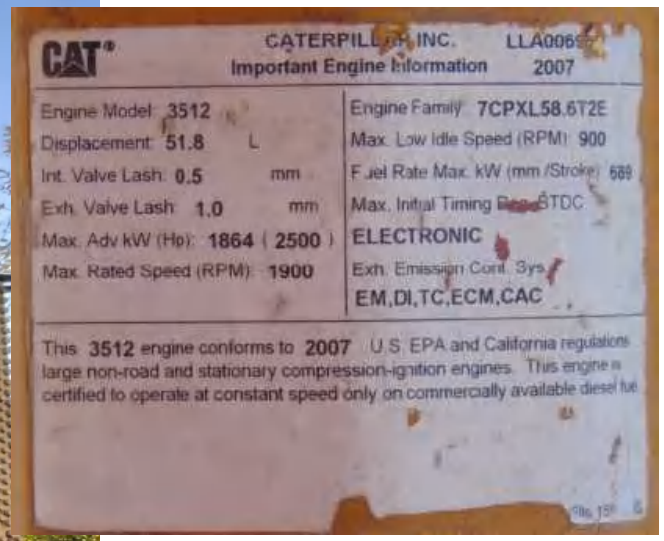

© Jakarta Drilling Society 2025

Power Generation & Control System

© Jakarta Drilling Society 2025

Power Generation & Control System

Performance

COMPARISON TABLE OF DIESEL GENERATORS

SERIE 379 - 398 - 399 SERIE 3500B

MODELS	N° of Cylinder	Displacement	RPM	POWER	Fuel consum. 100% Load	Fuel consum. 75% Load	Fuel consum. 50% Load
D379 PC TA	8 - V	32,2 l	1200	455 kW	249 g/bkW*h	248 g/bkW*h	252 g/bkW*h
3508B DI TA (Elettronico)	8 - V	34,5 l	1200	682 kW	207 g/bkW*h	205 g/bkW*h	208 g/bkW*h
D398 PC TA	12 - V	48,3 l	1200	680 kW	236 g/bkW*h	234 g/bkW*h	241 g/bkW*h
3512B DI TA (Elettronico)	12 - V	51,8 l	1200	1100 kW	206 g/bkW*h	203 g/bkW*h	208 g/bkW*h
D399 PC TA	16 - V	64,4 l	1200	906 kW	234 g/bkW*h	229 g/bkW*h	240 g/bkW*h
3516B DI TA (Elettronico)	16 - V	69 l	1200	1383 kW	207 g/bkW*h	202 g/bkW*h	207 g/bkW*h

Consumption tolerance + 5%

Abbreviations:

PC: Pre Chamber
DI: Direct Injection
TA: Turbo Aftercooled

© Jakarta Drilling Society 2025

Power Generation & Control System

© Jakarta Drilling Society 2025

Power Generation & Control System

AC-DC POWER GENERATION STATION EXAMPLE

1. GENERATORS
2. CONTROL PANELS
3. TRANSFORMER
4. DC MOTOR
5. DIGITAL DRILLER CONSOLE
6. MOTOR CONTROL CENTER

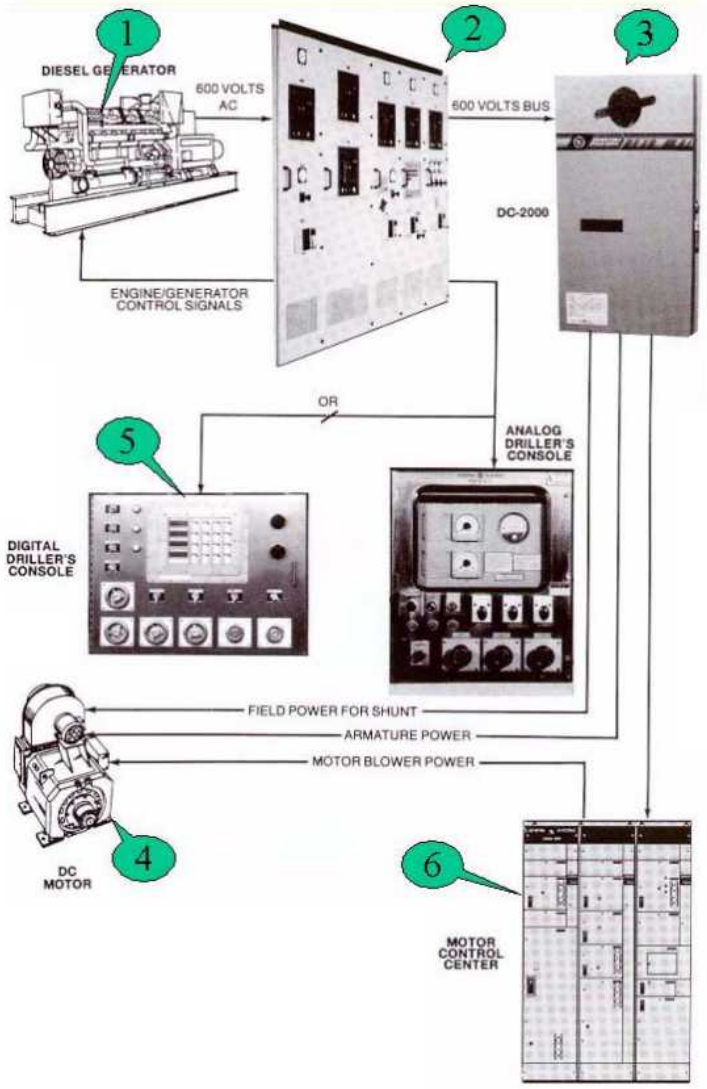

© Jakarta Drilling Society 2025

Power Generation & Control System

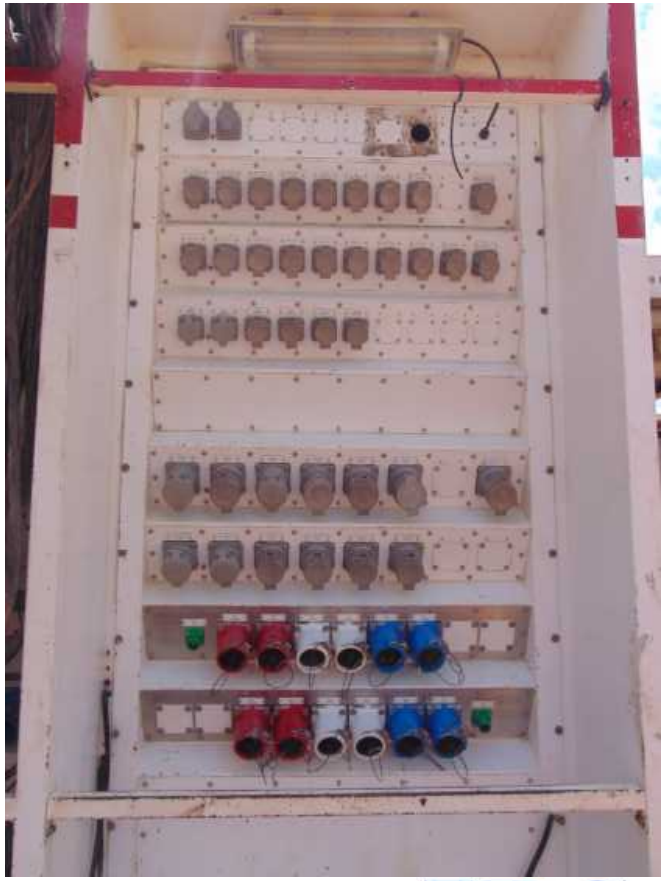

© Jakarta Drilling Society 2025

Power Generation & Control System

© Jakarta Drilling Society 2025

Power Generation & Control System

- How much electrical power does a rig need ?

Classification of Electric Drilling Rigs

General Classification of Electric Drilling Rigs by Drilling Depth

System type	Drilling depth (ft)	Drawworks drive HP & total DC mtrs	Mud Pumps drive HP & total DC mtrs	Rotary table drive HP & total DC mtrs	Engine generator system	SCR bays	Generator control
I	0-7500	500 HP 1 mtr	2-500 2 mtrs	Mech coupled to DW	2–500 kw	3	2
II	5000–9000	700 HP 1 mtr	2–500 2 mtrs	Mech coupled to DW	2–800 kw	3	2
III	7000–12,000	1000 HP 1 mtr	2–1000 2 mtrs	Mech coupled to DW	3–600 kw or 2–1050 kw	3	2 or 3
IV	10,000–16,000	1500 HP 2 mtrs	2–1300 4 mtrs	Mech coupled or 400 HP 1 mtr	3–1300 kw	4	3
V	12,000–20,000	2000 HP 2 mtrs	2–1600 4 mtrs	400 HP 1 mtr	4–1300 kw	4	4
VI	15,000–30,000	3000 HP 3 mtrs	3–1600 6 mtrs	400 HP 1 mtr	4–2000 kw or 5–1500 kw	6	4 or 5

© Jakarta Drilling Society 2025

Power Generation & Control System

© Jakarta Drilling Society 2025

Power Generation & Control System

© Jakarta Drilling Society 2025

Power Generation & Control System

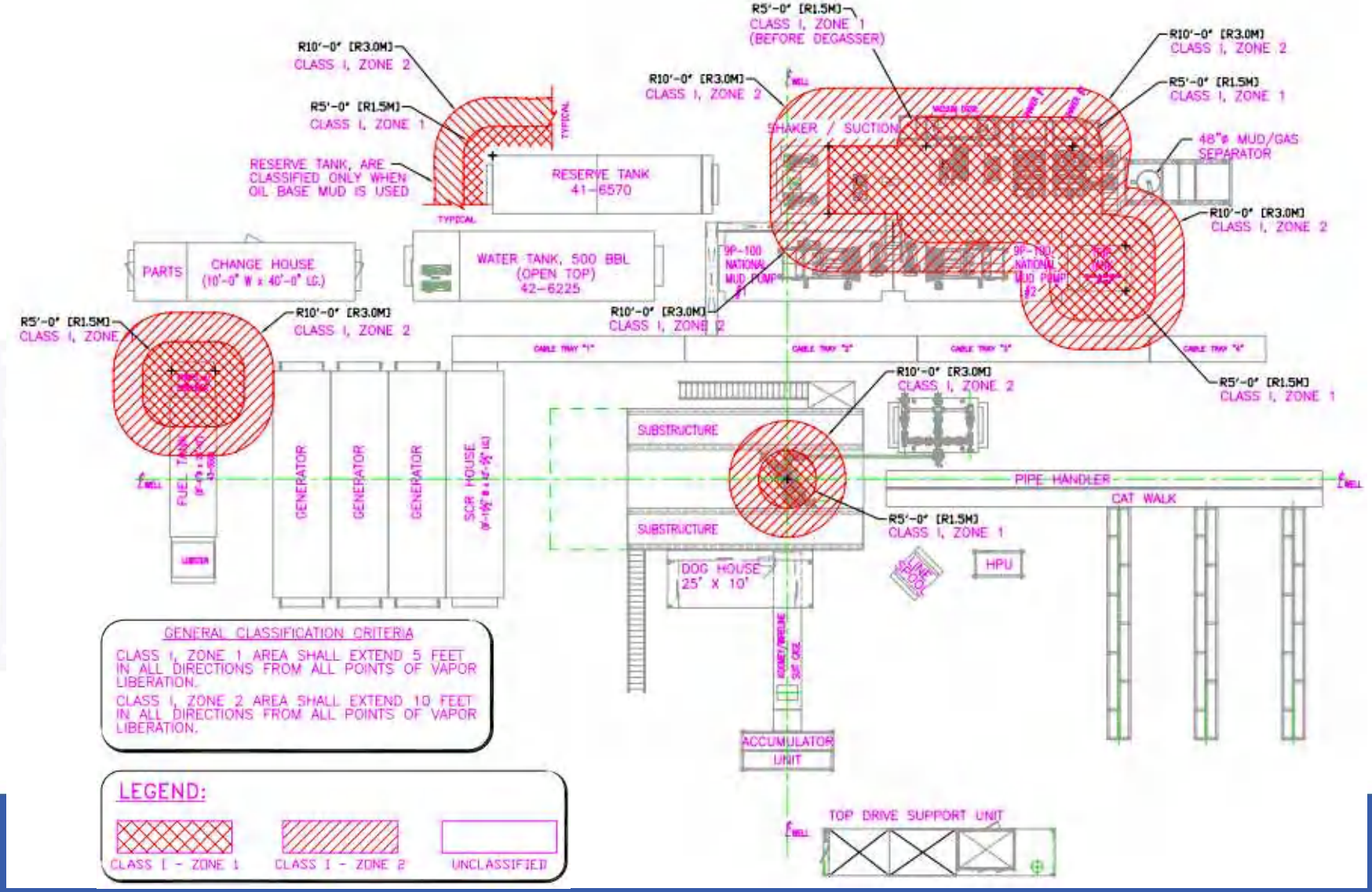

© Jakarta Drilling Society 2025

Drilling System & Rig Components

Well Control System

© Jakarta Drilling Society 2025

Jakarta Drilling Society

Well Control System

1. RIG FLOOR MUD MANIFOLD
2. INSIDE BOP
3. BOP STACK
4. CHOKE & KILL LINES
5. CHOKE & KILL MANIFOLD
6. BOP ACCUMULATOR
7. BOP CONTROL MANIFOLD

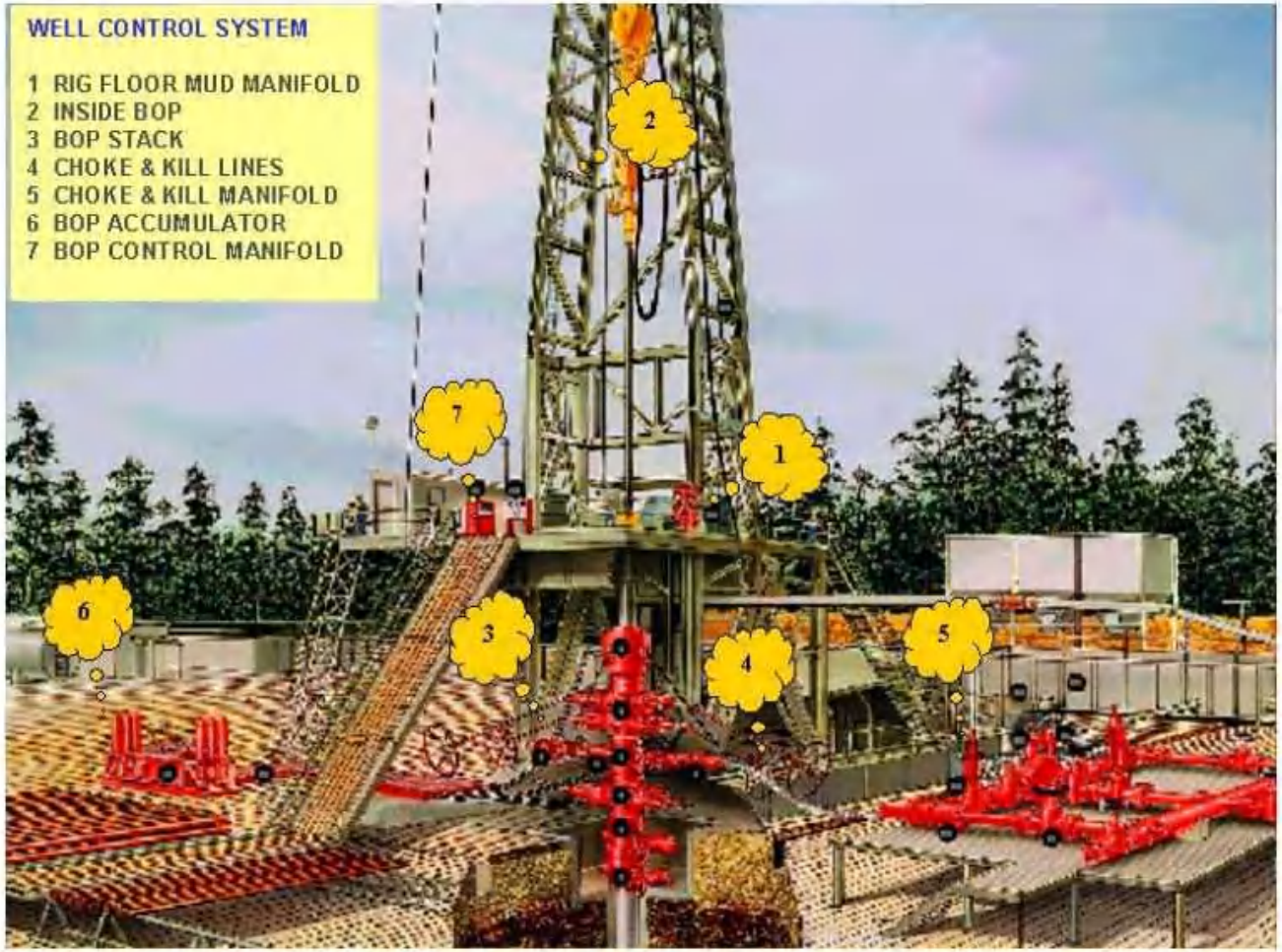

© Jakarta Drilling Society 2025

Well Control System

An inside blowout preventer, drill pipe float valve, or drop-in check valve should be available at all times during a drilling, completion or work-over operation.

The tool is especially useful when stripping into or out of the hole. The valve, sub, or profile nipple should be equipped to screw into any drill string member in use.

The inside blowout preventer, float valve, or drop-in check valve should be field tested to a pressure at least equal to 70% of the rated internal pressure at minimum yield strength for new pipe of the size and grade used in the upper part of the drill string (refer to API RP 7G: Recommended Practice for Drill Stem Design and Operating Limits), but limited to the BOP"s maximum rated working pressure.

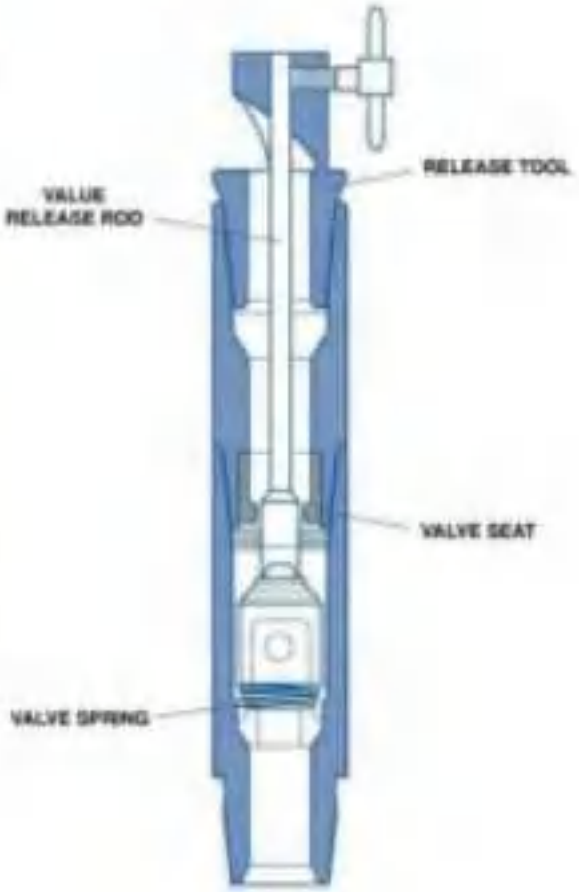

© Jakarta Drilling Society 2025

Well Control System

Full Opening Safety Valve (FOSV)

A Full Opening Safety Swivel (FOSV) should be installed between the swivel and the kelly.

The FOSV should be field tested to a pressure at least equal to 70% of the rated internal pressure at minimum yield for new pipe of the size and grade used in the upper part of the drill string (refer to API RP 7G: Recommended Practice for Drill Stem Design and Operating Limits) but limited to the rated working pressure of the BOPs up to a maximum of 10,000 psi.

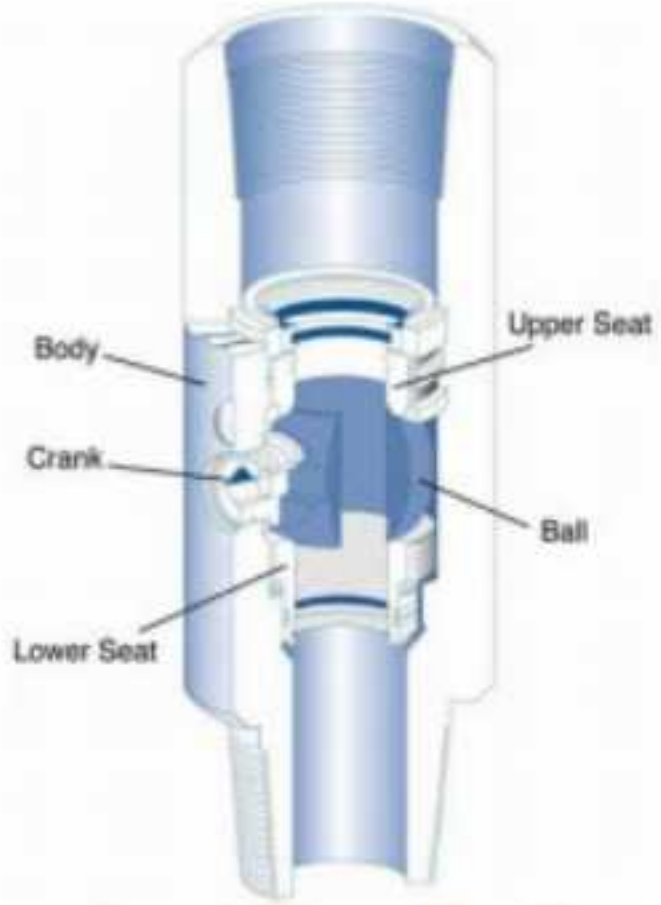

© Jakarta Drilling Society 2025

Well Control System

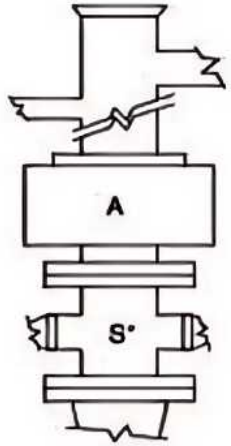

FIG C.1
ARRANGEMENT S*A

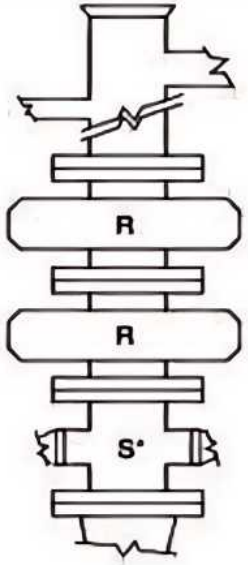

FIG C.2
ARRANGEMENT S*RR
Double Ram Preventers,
Rd Optional.

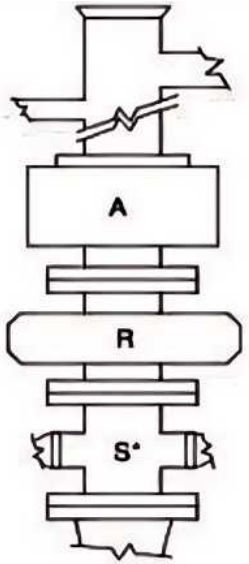

FIG C.3
ARRANGEMENT
S*RR

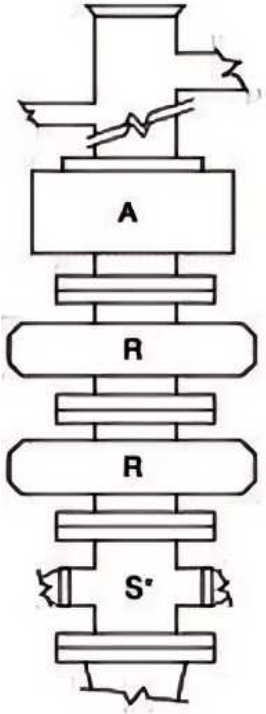

FIG C.5
ARRANGEMENT S*RRA
Double Ram Type Preventers,
Rd Optional.

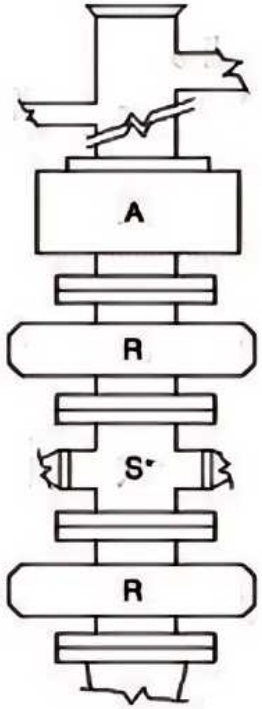

FIG C.6
ARRANGEMENT
RS*RA

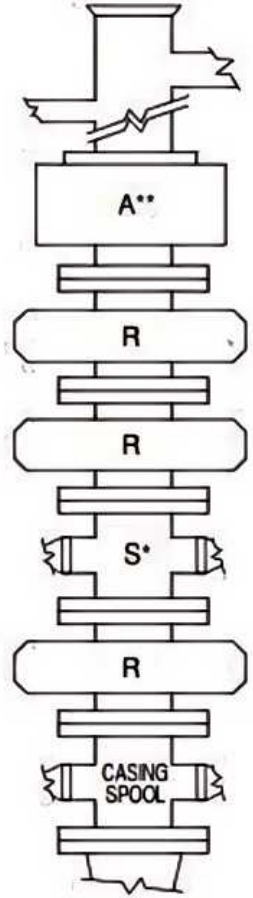

FIG C.7
ARRANGEMENT RS*RRA**
Double Ram Type Preventers,
Rd Optional.

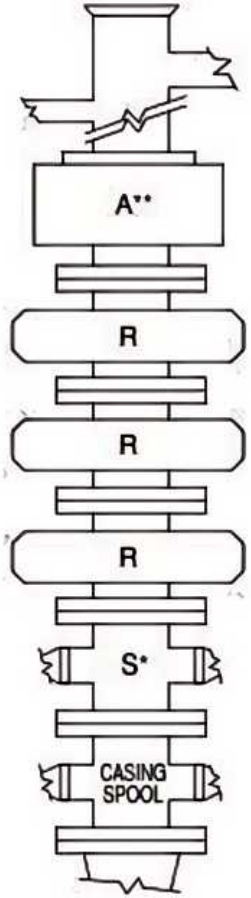

FIG C.8
ARRANGEMENT S*RRRA**
Double Ram Type Preventers,
Rd Optional.

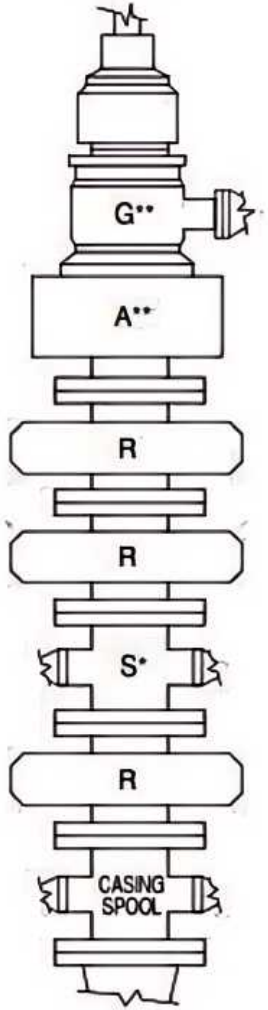

FIG C.9
ARRANGEMENT RS*RRA**G**
Double Ram Type Preventers,
Rd Optional.

Jakarta Drilling Society
© Jakarta Drilling Society 2025

Well Control System

© Jakarta Drilling Society 2025

Well Control System

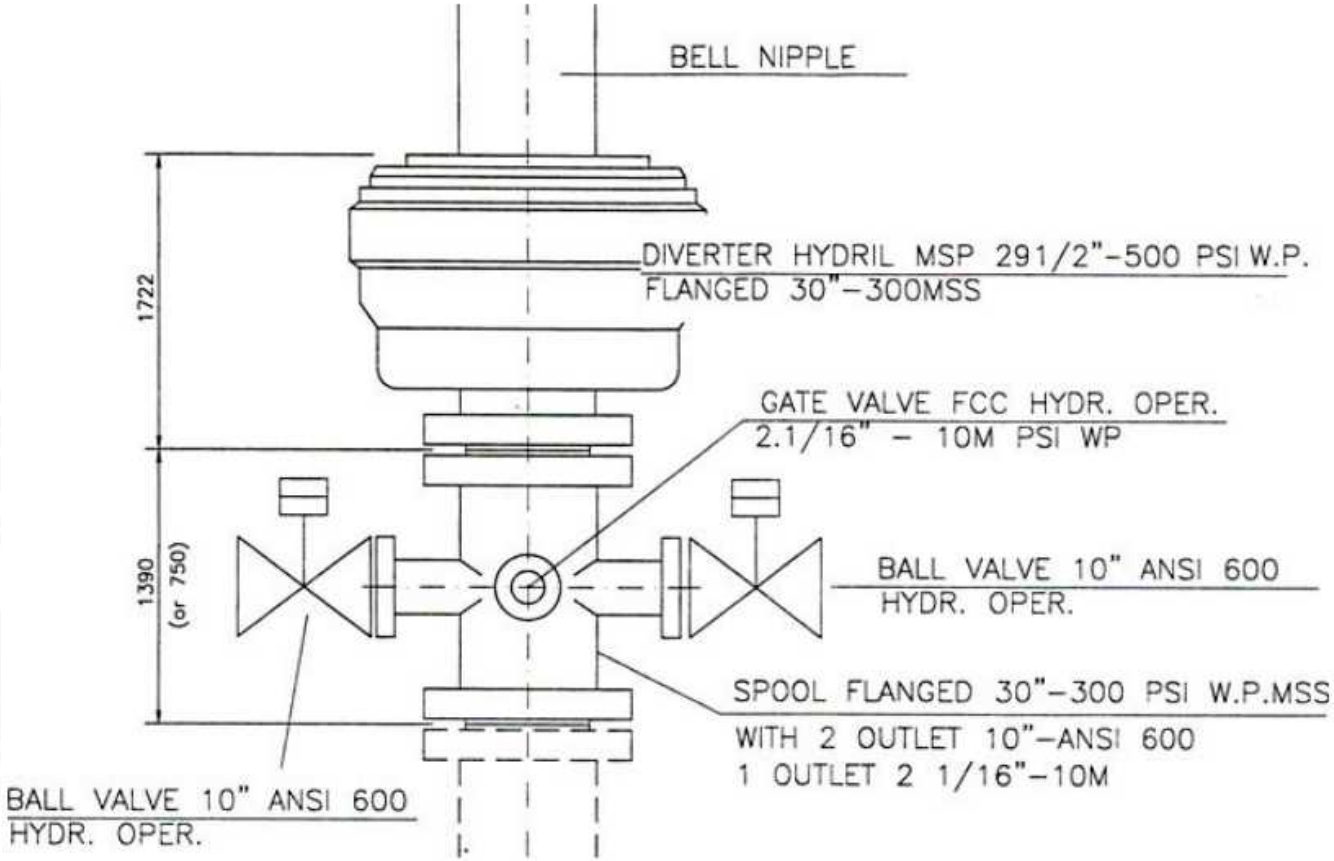

© Jakarta Drilling Society 2025

Well Control System

- Hydril MSP
The 29 " Diverter is the most commonly used.
It allows the running of 27 " bit.

For fast moving type Rigs, uses the 20" annular BOP

The MSP 29-1/2"-500 requires only closing pressure.

Seal off is effected by hydraulic pressure applied to the closing chamber which raises the piston, moving the packing unit radially inward into a sealing engagement.

Any normal closing unit having a separate regulator valve for the annular BOP and sufficient accumulator volume can be used to operate the MSP.

Hydril MSP 29-1/2-500 psi

- Table Data

			HL	
BORE SIZE (inches)		21-1/4	21-1/4	29-1/2
WORKING PRESSURE (psi)		2000	2000	500
HEAD TYPE		LATCHED	SCREWED	LOCKRING
OLD NOMINAL SIZE		20"	20"	29-1/2"
SHELL TEST PRESSURE Factory Only		3000	3000	800
OPERATING CHAMBER TEST PRESSURE Factory Only		3000	3000	2275
• OPERATING CHAMBER VOLUME (Gal.) (For Full Piston Stroke)	CLOSING	31.05	31.75	60
	OPENING	18.93	19.25	–
FULL PISTON STROKE (inches)		11-1/4	11-1/2	13-9/16
BODY DIAMETER (inches)		56-5/8	52-1/2	75
CLEARANCE DIAMETER (inches)		58-3/4	61-1/4	82.5
**HEIGHT (inches)	FLANGED BOTTOM	▲	48	–
	STUDDED BOTTOM	46	–	–
	CIW HUB BOTTOM	▲	48	–
**WEIGHT (lbs.) approximate	FLANGED BOTTOM	16320	–	24500
	STUDDED BOTTOM	15290	–	–
	CIW HUB BOTTOM	▲	12700	–
STANDARD RING GROOVE	FLANGED	RX-73	–	R-95
	STUDDED	RX-73	–	–
	CIW HUB	▲	RX-73	–

- Table Initial Closing Pressure (psi)

Required for MSP 29-1/2"-500 BOP / DIVERTER

Closing Pressure 500 psi Wellbore		
12" ipe	**5" Pipe**	**CSO**
959 psi	**1350 psi**	**1500 psi**

© Jakarta Drilling Society 2025

Well Control System

Hydril GK

Hydril GL

Hydril MSP

SIZES AND PRESSURE RATINGS OF ANNULAR BLOWOUT PREVENTERS

Bore Size (Inches)	Working Pressure Ratings (psi)							
	500	1000	2000	3000	5000	10,000	15,000	20,000
2-9/16	—	—	—	GKS	GKS	GKS	—	—
4-1/16	—	—	—	—	—	GS	GS	—
6-3/8	—	—	—	RS	—	—	—	—
7-1/6	—	—	MSP	GK	GK	GK	GK	GK
9	—	—	MSP	GK	GK	GK	—	—
11	—	—	MSP	GK	GK	GX	GX	—
13-5/8	—	—	—	GK	GL/GK	GX	GX	—
16-3/4	—	—	—	—	GL/GK	GX	—	—
18-3/4	—	—	—	—	GL	GX	—	—
21-1/4	—	—	MSP	—	GL	—	—	—
29-1/2	MSP	—	—	—	—	—	—	—
30	—	MSP	—	—	—	—	—	—

© Jakarta Drilling Society 2025

Well Control System

- ***Components***

Annular BOPs are equipped with a piston closing device which is hydraulically operated by applying pressure to closing and opening chambers.

The main BOP components are:

- body
- head
- piston
- closing/opening chambers
- packing unit
- seals

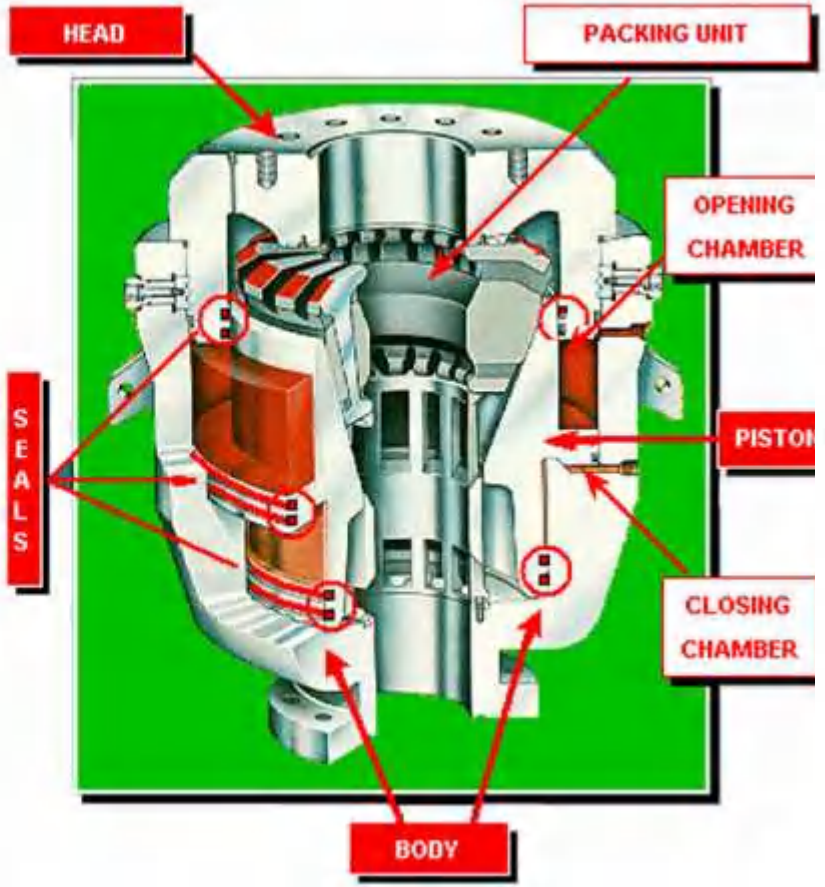

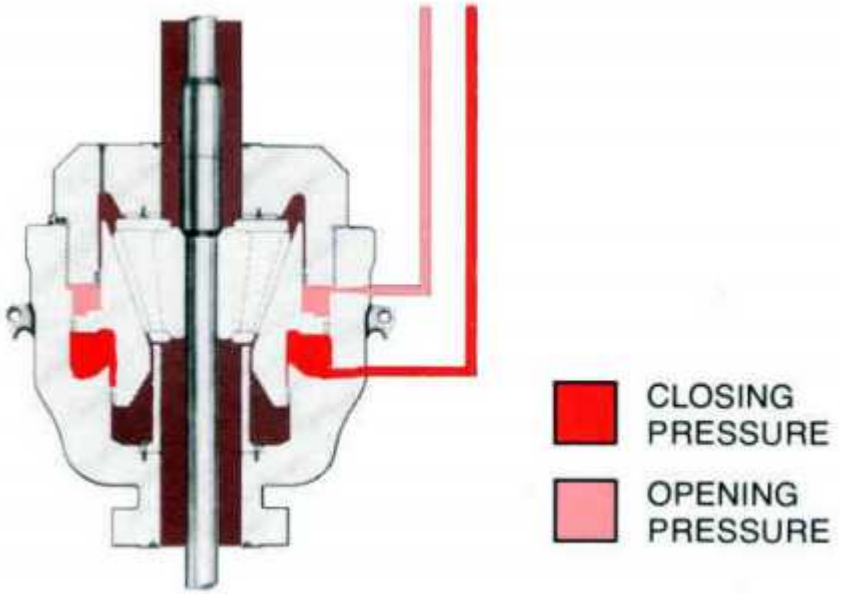

Closing and Opening Pressure

© Jakarta Drilling Society 2025

Well Control System

The type of packing used depends on the mud type and climatic conditions

Natural Rubber

Nitrile Rubber

Neoprene Rubber

- Natural Rubber

Is compounded for drilling with water-base drilling fluids.
Natural rubber can be used at operating temperatures between

-30 F to 255 F (-35 C to 107 C)

- Nitrile Rubber

(a synthetic compound) is for use with oil-base or oil-additive drilling fluids.
It provides the best service with oil-base muds, when operated at temperatures between

20 F to 190 F (-7 C to 88 C)

- Neoprene Rubber

Is for low-temperature operating service and oil-base drilling fluids.
It can be used at operating temperatures between

-30 F to +170 F (-35 C to 77 C)

Sealing Element

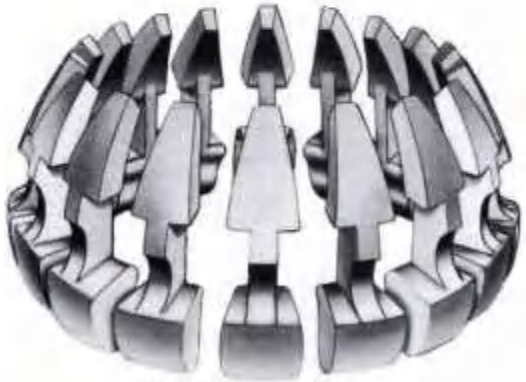

Steel Reinforcing Segments

© Jakarta Drilling Society 2025

Well Control System

Comparison of Cameron Ram-Type BOPs

Description	TL BOP	UM BOP	U BOP
Bore Sizes	Working Pressures	Working Pressures	Working Pressures
7-1/16"	-	3000 psi WP	3000 psi WP
	-	5000 psi WP	5000 psi WP
	-	10,000 psi WP	10,000 psi WP
	-	15,000 psi WP	15,000 psi WP
11"	-	-	3000 psi WP
	-	5000 psi WP	5000 psi WP
	-	10,000 psi WP	10,000 psi WP
	-	15,000 psi WP	15,000 psi WP
13-5/8"	-	-	3000 psi WP
	-	5000 psi WP	5000 psi WP
	10,000 psi WP	10,000 psi WP	10,000 psi WP
	-	15,000 psi WP	15,000 psi WP
16-3/4"	-	-	3000 psi WP
	-	-	5000 psi WP
	-	-	10,000 psi WP
18-3/4"	5000 psi WP	-	-
	10,000 psi WP	-	10,000 psi WP
	15,000 psi WP	-	-
20-3/4"	-	-	3000 psi WP
21-1/4"	-	-	2000 psi WP
	-	-	5000 psi WP
	-	-	10,000 psi WP
26-3/4"	-	-	3000 psi WP

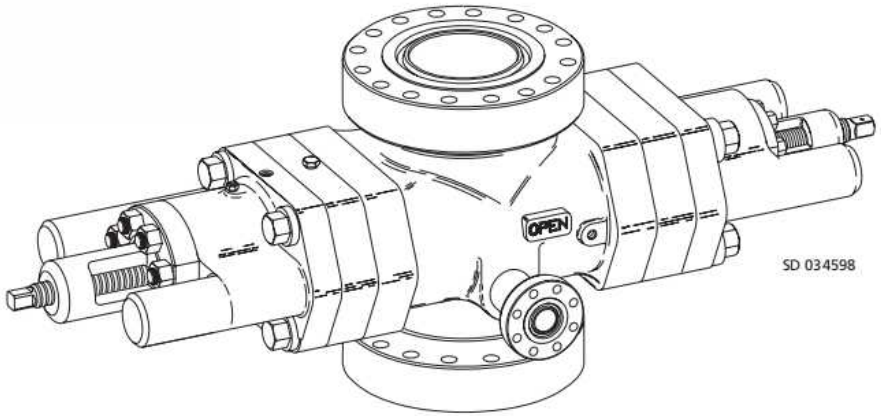

U Blowout Preventer

© Jakarta Drilling Society 2025

Well Control System

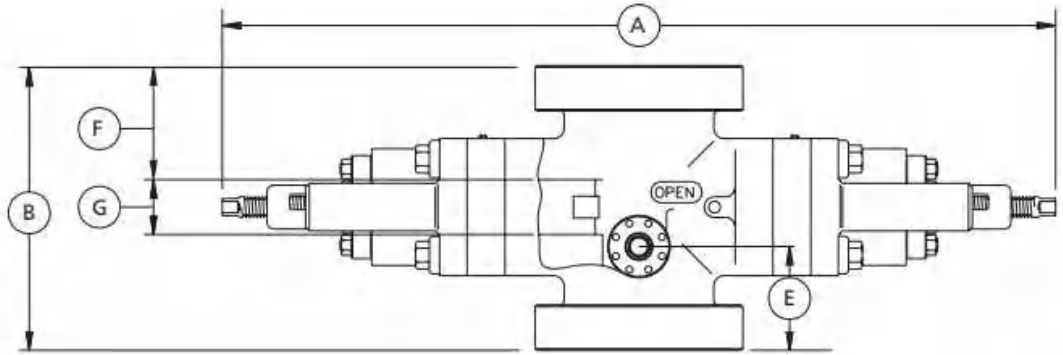

Side View Single U BOP

SD 034601

Size (in.)	Pressure Rating (psi)	Vertical Bore (in.)	A-1 (in.)	A-2 (in.)	A-3 (in.)	A-4 (in.)	B-1 (in.)	B-2 (in.)	C (in.)	E-1 (in.)	E-2 (in.)	F-1 (in.)	F-2 (in.)	G (in.)	Approx. Weight (lb)
7-1/16*	3000	7-1/16	74.00	109.50	-	-	24.06	-	20.25	8.75	-	7.84	-	5.50	2600
7-1/16*	5000	7-1/16	74.00	109.50	-	-	27.50	25.19	20.25	10.41	9.25	9.63	8.47	5.50	2800
7-1/16	10,000	7-1/16	74.00	109.50	-	-	30.56	27.19	20.63	11.06	9.38	12.03	10.34	5.50	3550
7-1/16	15,000	7-1/16	74.00	109.50	-	-	31.81	-	20.63	11.69	-	12.66	-	5.50	3800
11*	3000	11	96.25	146.88	-	-	29.06	-	25.13	9.81	-	10.53	-	6.75	5300
11*	5000	11	96.25	146.88	110.13	150.19	34.31	29.31	25.13	12.44	9.94	13.16	10.66	6.75	5600
11*	10,000	11	96.25	146.88	110.13	150.19	35.69	32.19	25.75	13.13	11.38	13.84	12.09	6.75	6400
11 Model 79	15,000	11	124.00	175.31	124.50	167.13	44.81	33.88	32.00	16.69	11.22	17.78	12.31	9.25	10,300
13-5/8	3000	13-5/8	112.13	171.50	122.69	166.06	31.31	-	29.25	10.31	-	11.53	-	7.50	7200
13-5/8	5000	13-5/8	112.13	171.50	122.69	166.06	33.81	31.94	29.25	11.56	10.63	12.78	11.84	7.50	7700
13-5/8	10,000	13-5/8	114.13	172.75	124.69	167.31	41.69	32.81	30.25	15.13	10.69	17.09	12.66	7.50	10,300
13-5/8 Model B*	15,000	13-5/8	139.00	214.38	152.25	205.50	53.69	42.00	39.50	21.38	15.50	22.84	17.00	8.00	23,700
16-3/4 Model B	3000	16-3/4	127.25	204.56	147.25	199.38	40.06	31.75	35.75	13.31	9.16	15.41	11.25	9.25	13,700
16-3/4 Model B	5000	16-3/4	129.25	202.13	149.25	202.25	43.06	34.94	35.75	14.81	10.75	16.91	12.84	9.25	13,750
16-3/4*	10,000	16-3/4	139.00	218.38	155.50	212.00	49.69	41.94	39.50	19.38	15.50	20.22	16.34	9.25	23,300
18-3/4	10,000	18-3/4	156.38	242.13	166.50	226.63	56.00	43.23	42.50	20.50	13.88	22.00	15.34	12.00	28,900
20-3/4	3000	20-3/4	143.69	226.81	163.94	223.88	40.56	33.31	39.52	14.31	10.69	16.28	12.66	8.00	13,650
21-1/4	2000	21-1/4	143.69	226.81	163.94	223.88	37.9	33.31	39.52	12.63	10.69	14.59	12.66	8.00	13,250
21-1/4	5000	21-1/4	164.25	247.25	180.94	239.25	50.94	46.13	42.50	17.97	17.19	18.72	14.69	13.50	30,000
21-1/4*	10,000	21-1/4	163.38	250.38	181.13	239.50	66.00	53.00	47.25	24.53	18.03	26.25	19.75	13.50	34,650
26-3/4	3000	26-3/4	169.63	275.38	-	-	48.31	-	46.25	17.44	-	19.91	-	8.00	24,000

© Jakarta Drilling Society 2025

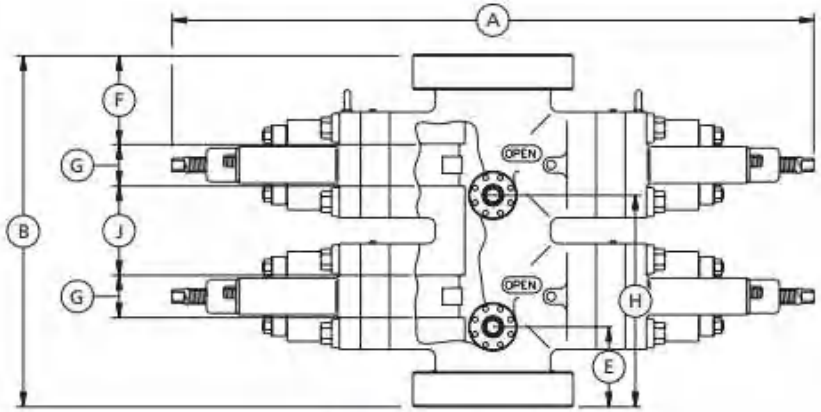

Side View - Double U BOP

SD 034600

Size (in.)	Press. Rating (psi)	Vert. Bore (in.)	A-1 (in.)	A-2 (in.)	A-3 (in.)	A-4 (in.)	B-1 (in.)	B-2 (in.)	B*** (in.)	C (in.)	E-1 (in.)	E-2 (in.)	F-1 (in.)	F-2 (in.)	G (in.)	H-1 (in.)	H-2 (in.)	J (in.)	Approx. Weight (lb)
7-1/16*	3000	7-1/16	74.00	109.50	-	-	41.00	-	18.56	20.25	8.75	-	7.84	-	5.50	25.69	-	11.44	5000
7-1/16*	5000	7-1/16	74.00	109.50	-	-	44.19	41.88	18.81	20.25	10.41	9.25	9.63	8.47	5.50	27.09	25.94	11.19	5200
7-1/16	10,000	7-1/16	74.00	109.50	-	-	48.63	45.25	17.44	20.63	11.06	9.38	12.03	10.34	5.50	29.13	27.44	12.56	6400
7-1/16	15,000	7-1/16	74.00	109.50	-	-	49.88	-	17.44	20.63	11.69	-	12.66	-	5.50	29.75	-	12.56	6750
11*	3000	11	96.25	146.88	-	-	49.25	-	16.56	25.13	9.81	-	10.53	-	6.75	30.00	-	13.44	9900
11*	5000	11	96.25	146.88	110.13	150.19	54.50	49.50	16.56	25.13	12.44	9.94	13.16	10.66	6.75	32.63	30.13	13.44	10,200
11*	10,000	11	96.25	146.88	110.13	150.19	55.88	52.38	16.56	25.75	13.13	11.38	13.84	12.09	6.75	33.31	31.56	13.44	11,300
11* Model 79	15,000	11	124.00	175.31	124.50	167.13	69.75	58.81	14.31	32.00	16.69	11.22	17.78	12.31	9.25	41.63	36.16	15.69	18,400
13-5/8	3000	13-5/8	112.13	171.50	122.69	166.06	53.38	-	15.44	29.25	10.31	-	11.53	-	7.50	32.38	-	14.56	14,300
13-5/8	5000	13-5/8	112.13	171.50	122.69	166.06	55.88	54.00	15.44	29.25	11.56	10.63	12.78	11.84	7.50	33.63	32.69	14.56	14,800
13-5/8	10,000	13-5/8	114.13	172.75	124.69	167.31	66.63	57.75	12.56	30.25	15.13	10.69	17.09	12.66	7.50	40.06	35.63	17.44	18,400
13-5/8 Mod B*	15,000	13-5/8	139.00	214.38	152.25	205.50	81.75	70.13	9.94	39.50	21.38	15.50	22.84	17.00	8.00	49.44	43.56	20.06	43,250
16-3/4* Mod B	3000	16-3/4	127.25	204.56	147.25	199.38	65.88	57.56	13.44	35.75	13.31	9.16	15.41	11.25	9.25	39.13	34.97	16.56	26,650
16-3/4 Mod B	5000	16-3/4	129.25	202.13	149.25	202.25	68.88	60.75	13.44	35.75	14.81	10.75	16.91	12.84	9.25	40.63	36.56	16.56	26,940
16-3/4*	10,000	16-3/4	139.00	218.38	155.50	212.00	77.75	70.00	11.19	39.50	19.38	15.50	20.22	16.34	9.25	47.44	43.56	18.81	43,500
18-3/4	10,000	18-3/4	156.38	242.13	166.50	226.63	87.13	74.00	10.88	42.50	20.50	13.88	22.00	15.34	12.00	51.50	44.88	19.13	56,950
20-3/4	3000	20-3/4	143.69	226.812	163.94	223.88	66.13	58.88	12.44	39.52	14.31	10.69	16.28	12.66	8.00	39.88	36.25	17.56	25,550
21-1/4	2000	21-1/4	143.69	226.81	163.94	223.88	62.75	58.88	12.44	39.52	12.63	10.69	14.59	12.66	8.00	38.19	36.25	17.56	25,150
21-1/4	5000	21-1/4	164.25	247.25	180.94	239.25	82.38	74.00	12.38	42.50	17.97	17.19	18.72	14.69	13.50	49.03	45.00	17.63	58,000
21-1/4*	10,000	21-1/4	163.38	250.38	181.13	239.50	100.06	87.06	9.44	47.25	24.53	18.03	26.25	19.75	13.50	58.59	52.09	20.56	65,500
26-3/4	3000	26-3/4	169.63	275.38	-	-	78.88	-	7.44	46.25	17.44	-	19.91	-	8.00	48.00	-	22.56	44,200

Jakarta Drilling Society
© Jakarta Drilling Society 2025

Well Control System

- **Types of rams**

The types of rams in use include:

- Pipe Rams
- Variable Rams
- Blind Rams
- Blind / Shear Rams

Clamped BOP

Flanged BOP Stack

© Jakarta Drilling Society 2025

Well Control System

VBR Components

- **Hydril BOP rams**

Rams Type

- Blind Ram
- Pipe Rams
- Variable rams
- Shear rams

Table VBR Hang-Off

	VBR Hangoff									
	Range		Drill Pipe Tool Joint Hangoff Capacity (lb)							
BOP	Max	Min	2 3/8"	2 7/8"	3 1/2"	4 1/2"	5"	5 1/2"	6 5/8"	7 5/8"
7-1/16" 3/15M U	3 1/2"	2 3/8"	30,000	30,000	150,000	X	X	X	X	X
	4"	2 7/8"	X	30,000	100,000	X	X	X	X	X
11" 3/5M U	5"	2 7/8"	X	30,000	110,000	150,000	300,000*	X	X	X
11" 10M U	5"	3 1/2"	X	X	110,000T	150,000	300,000*	X	X	X
11" 15M U	5"	2 7/8"	X	40,000	150,000	200,000	450,000*	X	X	X

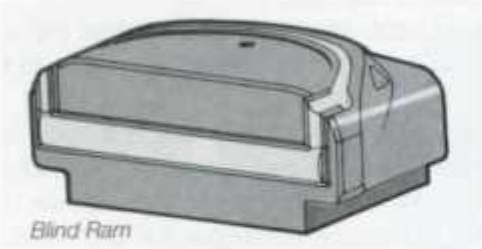

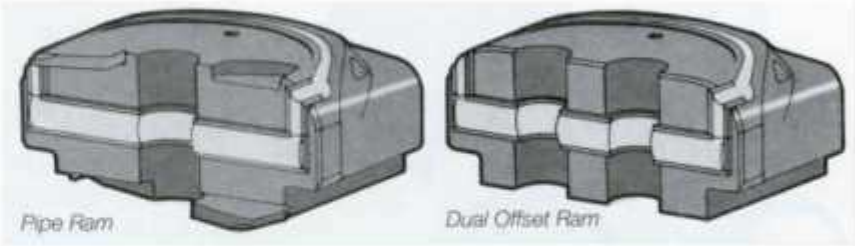

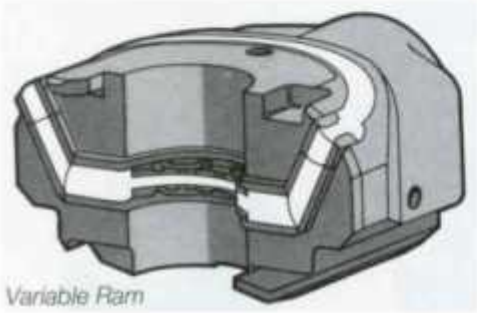

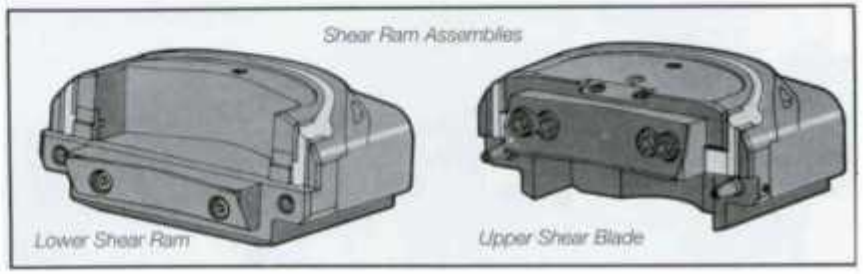

- Blind rams

© Jakarta Drilling Society 2025

Well Control System

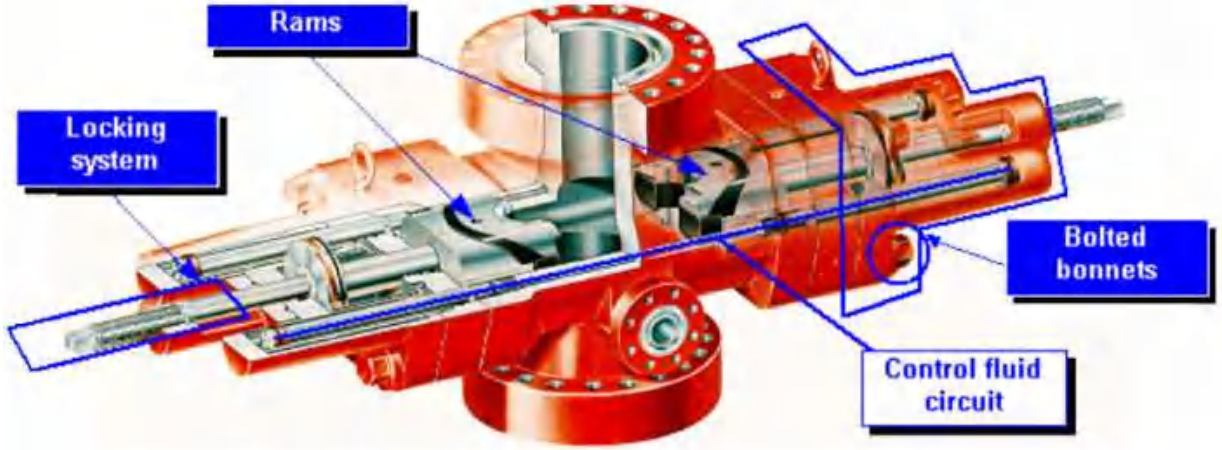

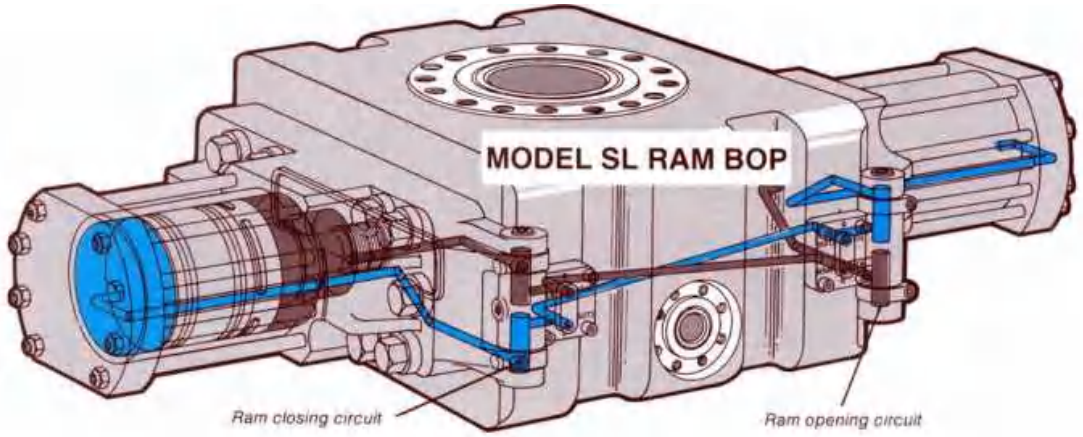

Operating system Ram BOP SHAFFER

© Jakarta Drilling Society 2025

Well Control System

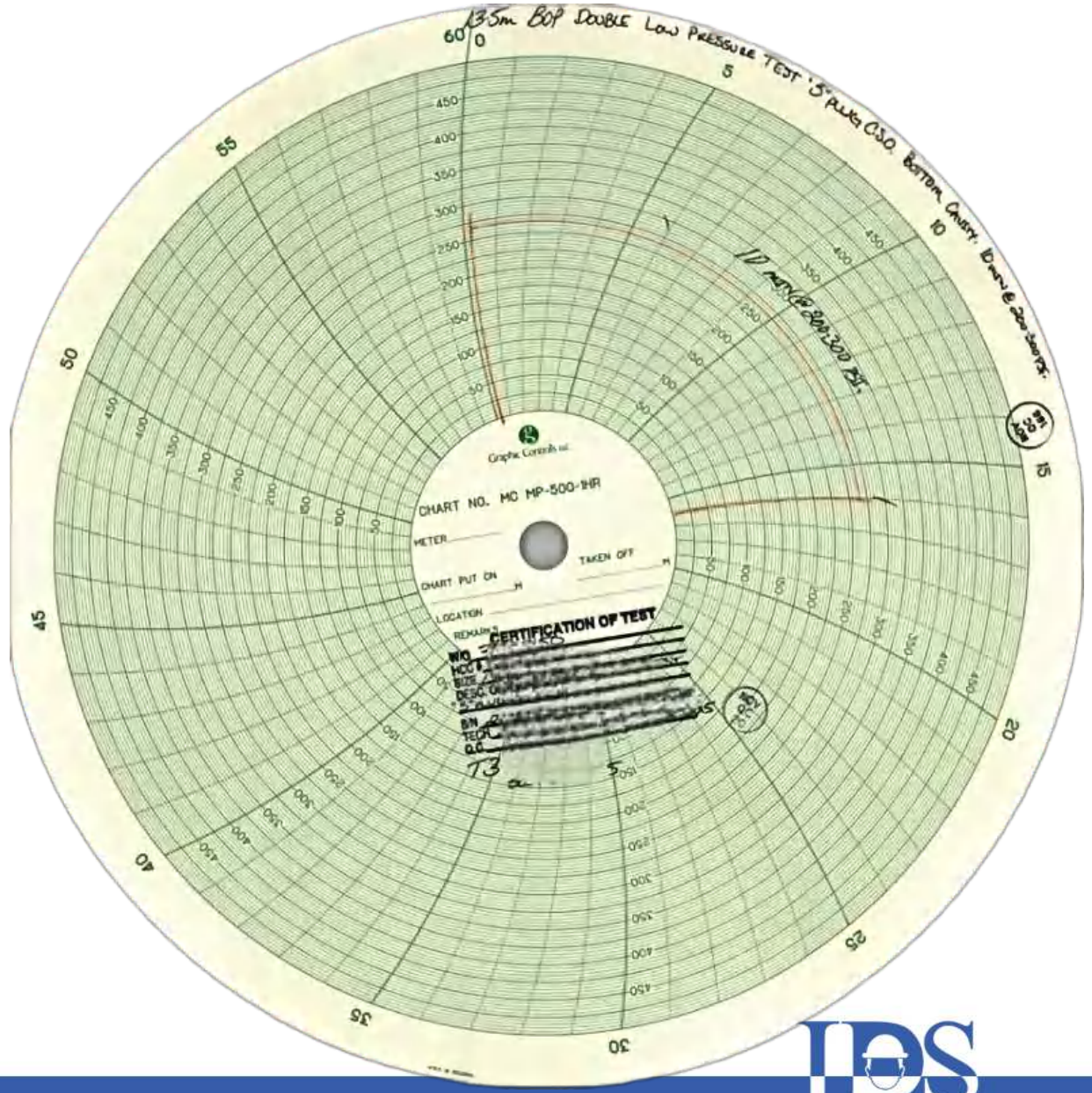

© Jakarta Drilling Society 2025

Well Control System

© Jakarta Drilling Society 2025

Well Control System

© Jakarta Drilling Society 2025

Well Control System

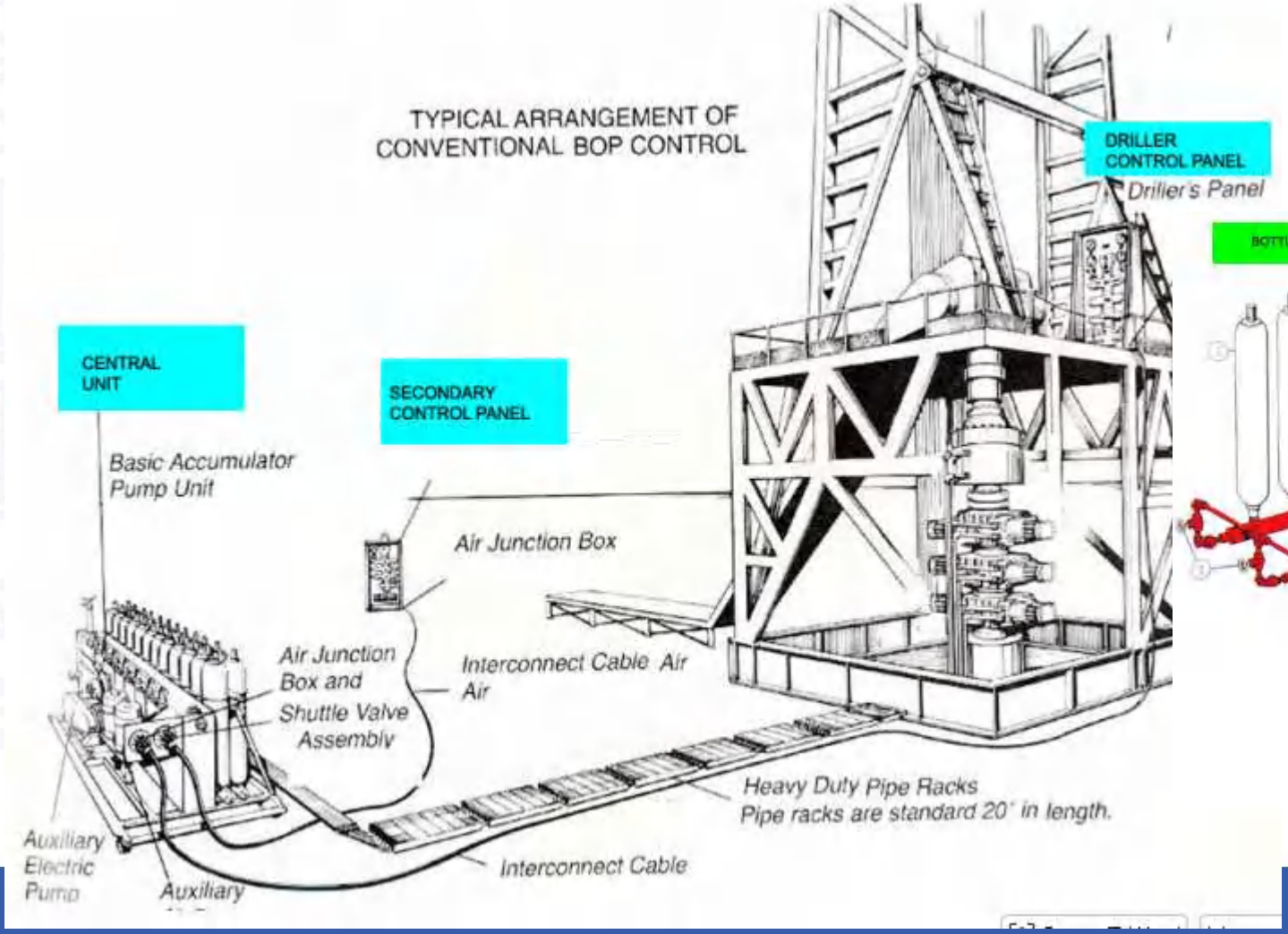

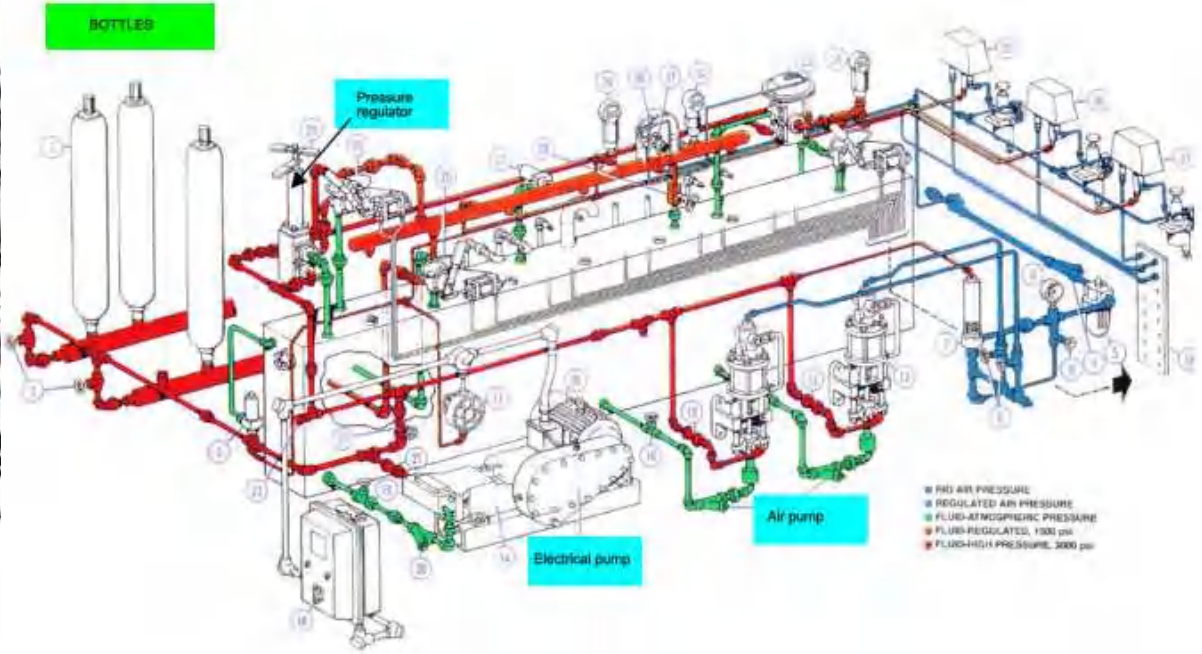

© Jakarta Drilling Society 2025

Well Control System

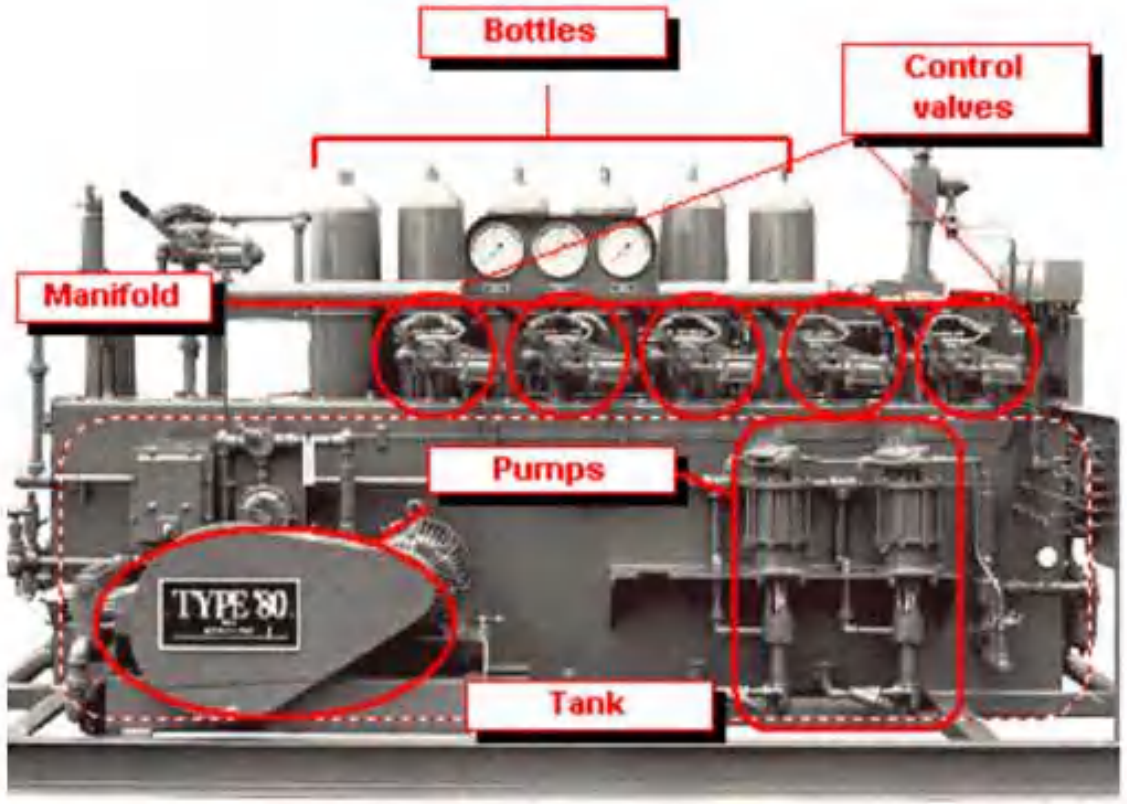

- **Response times**

API RP 53 and ENI Well Control Policy stipulate:

- ***Closing response for a Ram BOP max 30 seconds***
- ***Closing response for a BAG BOP 18" max 30 seconds***
- ***Closing response for a BAG BOP >18" max 45 seconds***

© Jakarta Drilling Society 2025

Well Control System

© Jakarta Drilling Society 2025

Well Control System

© Jakarta Drilling Society 2025

Well Control System

5,000 PSI

DESCRIPTION		MINIMUM BORE				
		2 1/16"	2 9/16"	3 1/8"	4 1/16"	6 1/8"
(A) ENE TO END, THREADED		10 5/8" (10.625")	12 3/8" (12.375")	13 5/8" (13.625")	———	———
(A) END TO END, FLANGED		14 5/8" (14.625")	16 5/8" (16.625")	18 5/8" (18.625")	20 5/8" (20.625")	29"
(B) EXTREME WIDTH OF BODY		7"	8 3/16" (8.1875")	9 1/4" (9.250")	10 13/16" (10.8125")	14 1/8" (14.125")
(C) CENTER OF BORE TO TOP OF STEM ADAPTER		15 1/8" (15.125")	15 15/16" (15.9375")	16 13/16" (16.8125")	18 7/16" (18.4375")	22 3/4" (22.750")
(D) CENTER OF BORE TO BOTTOM OF BODY		5 5/8 " (5.625")	6 1/2" (6.500")	7 3/8" (7.375")	9 1/8" (9.125")	12 3/4" (12.750")
(E) CENTER OF BORE TO TOP OF HANDWHEEL RIM		17 3/8" (17.375")	18 1/8" (16.125")	19 1/16" (19.0625")	20 11/16" (20.6875")	24"
(F) HANDWHEEL OD		14"	14"	18 1/2"	18 1/2"	24"
NUMBER OF TURNS TO FULLY OPEN OR CLOSE +/- 1/4		12 1/2	15 1/4	18 1/4	23 1/2	33 1/2
ESTIMATED WEIGHT	FLANGED	182lb	255lb	360lbs	545lbs	1090lbs
	THREADED	130lb	185lb	210lbs	———	———

				M BORE		
				3 1/16"	4 1/16"	6 3/8"
				24 3/8" (24.375")	26 3/8" (26.375")	35"
				10 1/4" (10.250")	12 13/16" (12.8125")	17 1/8" (17.125")
(C) CENTER OF BORE TO TOP OF STEM ADAPTER	15 1/8" (15.125")	15 1/8" (15.125")	15 13/16" (15.8125")	16 7/8" (16.875")	19 11/16" (19.6875")	45 1/8" (45.125")
(D) CENTER OF BORE TO BOTTOM OF BODY	5 3/4 " (5.750")	5 7/8" (5.875")	6 13/16" (6.8125")	8 1/16" (8.0625")	10 1/16" (10.0625")	14 3/4" (14.750")
(E) CENTER OF BORE TO TOP OF HANDWHEEL RIM	17 3/8" (17.375")	17 3/8" (17.375")	18 1/8" (18.125")	18 1/16" (18.0625")	20 15/16" (20.9375")	55 5/8" (55.625")
(F) HANDWHEEL OD	14"	18 1/2"	18 1/2"	24"	24"	44"
NUMBER OF TURNS TO FULLY OPEN OR CLOSE +/- 1/4	12 1/2	12 1/2	15 1/4	18 1/4	23 1/2	43 1/8
ESTIMATED WEIGHT	270lb	275lb	485lbs	680lbs	1057lbs	3500lbs

© Jakarta Drilling Society 2025

Well Control System

- Example of typical BOP Assembly (as per API RP 53)

Example Surface BOP Stack/Choke Manifold Installation

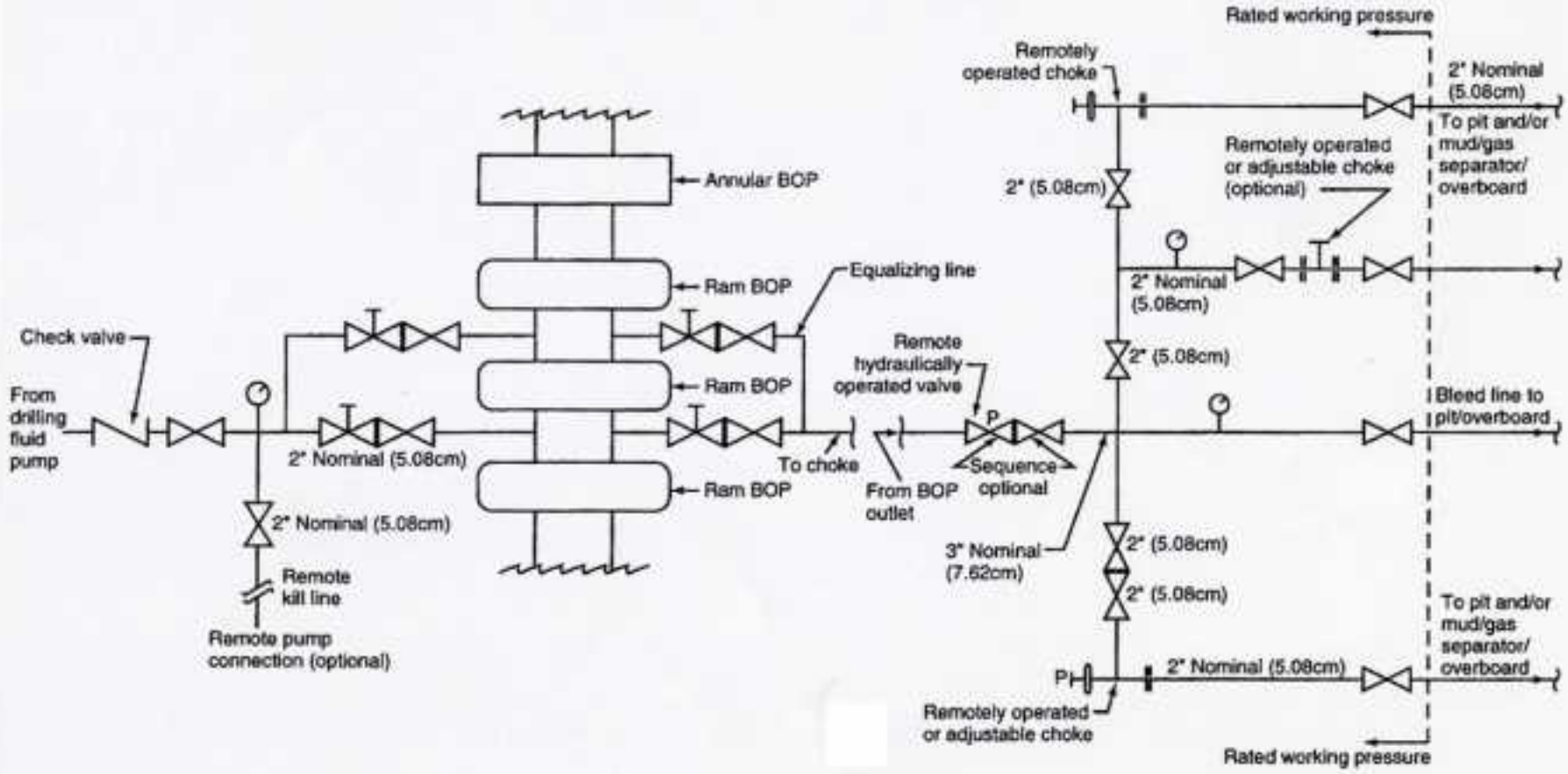

Figure 21—Example Surface BOP Stack/Choke Manifold Installation

© Jakarta Drilling Society 2025

Well Control System

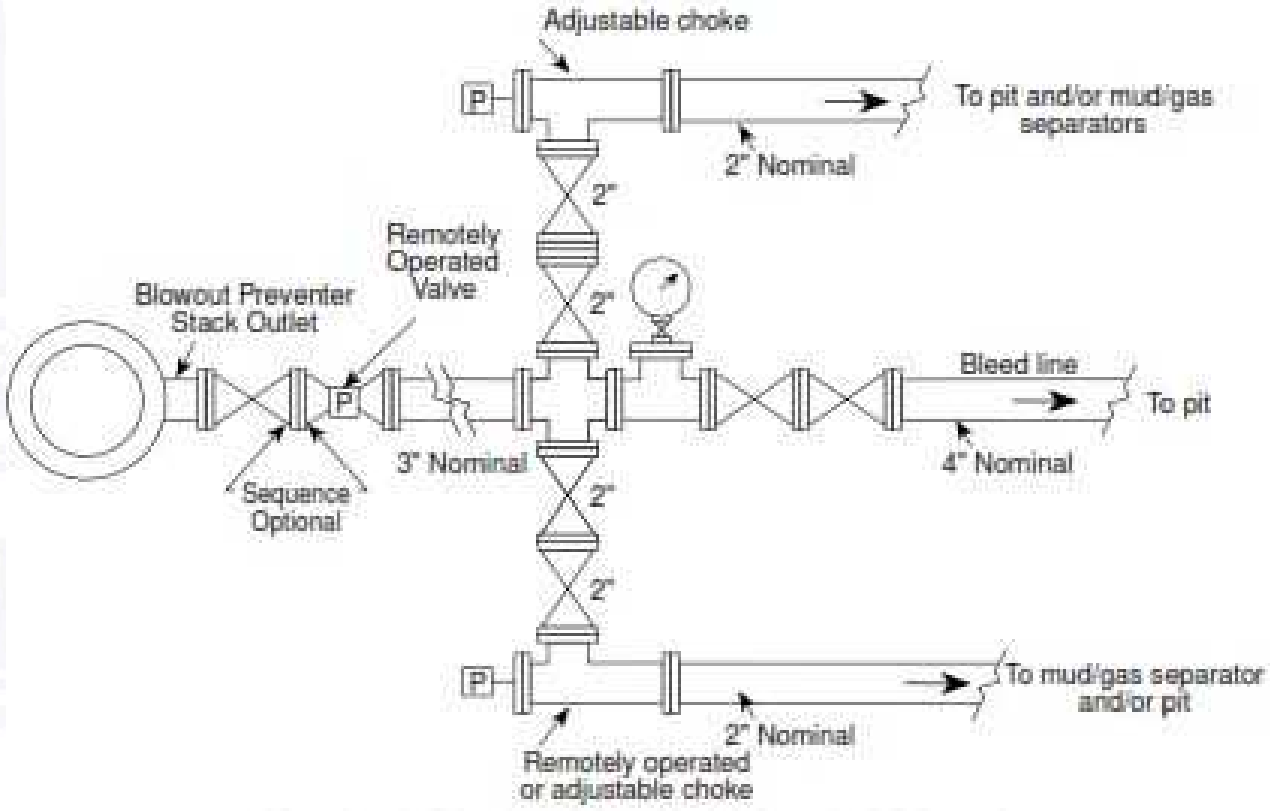

© Jakarta Drilling Society 2025

Well Control System

© Jakarta Drilling Society 2025

Well Control System

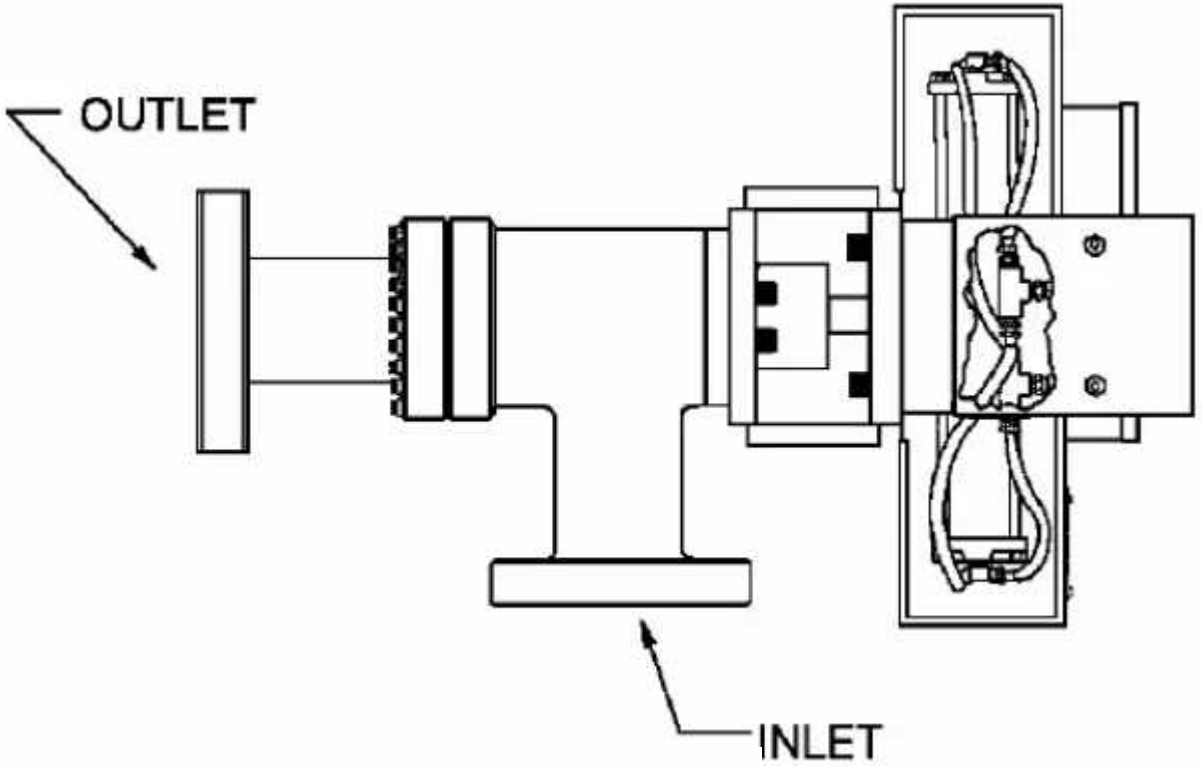

© Jakarta Drilling Society 2025

Well Control System

SWACO's H2S Mud/Gas Separator

SMEDVIG Mud Gas Separator

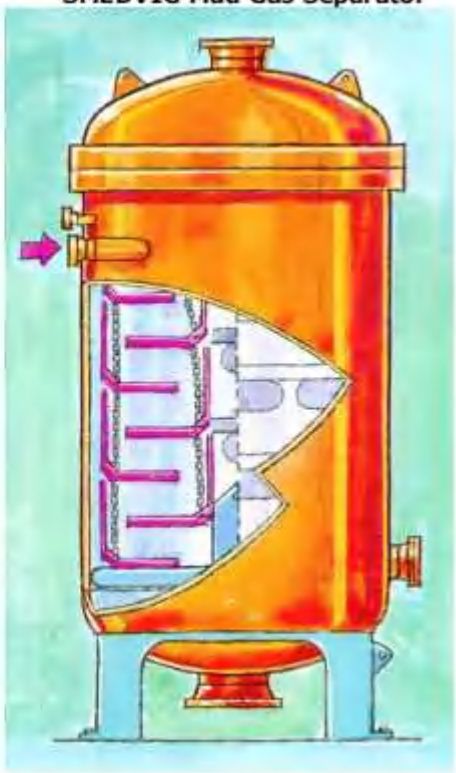

© Jakarta Drilling Society 2025

Well Control System

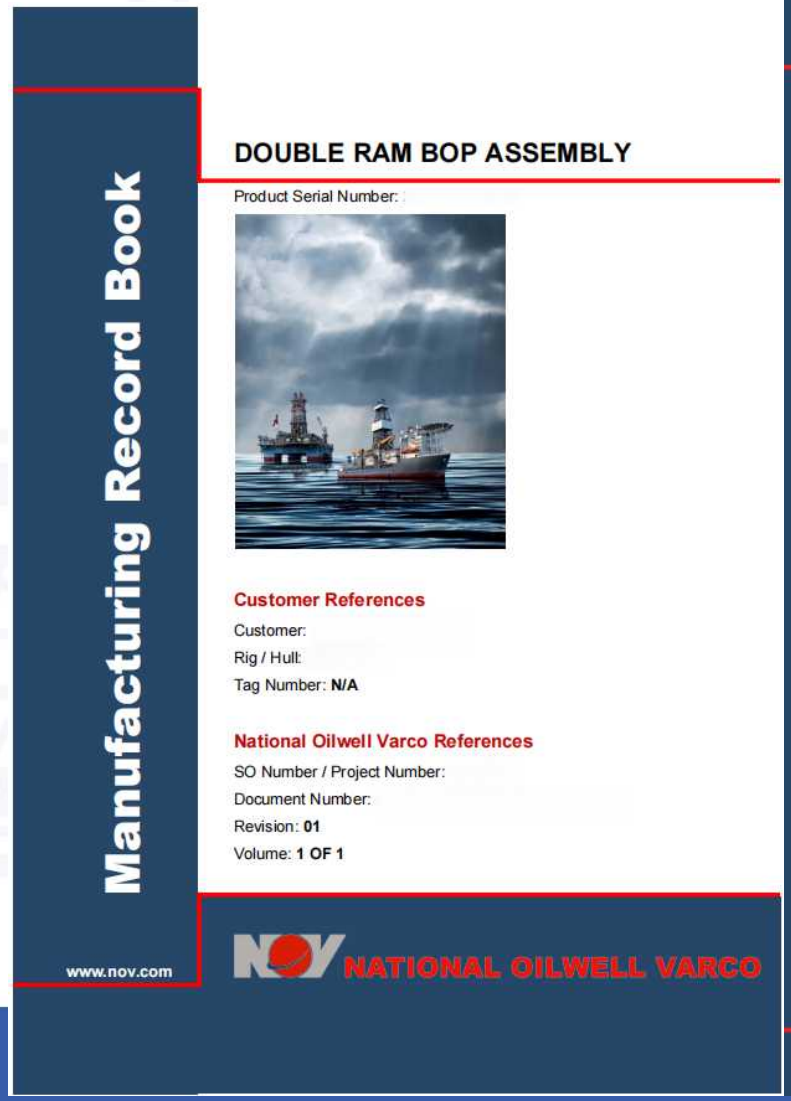

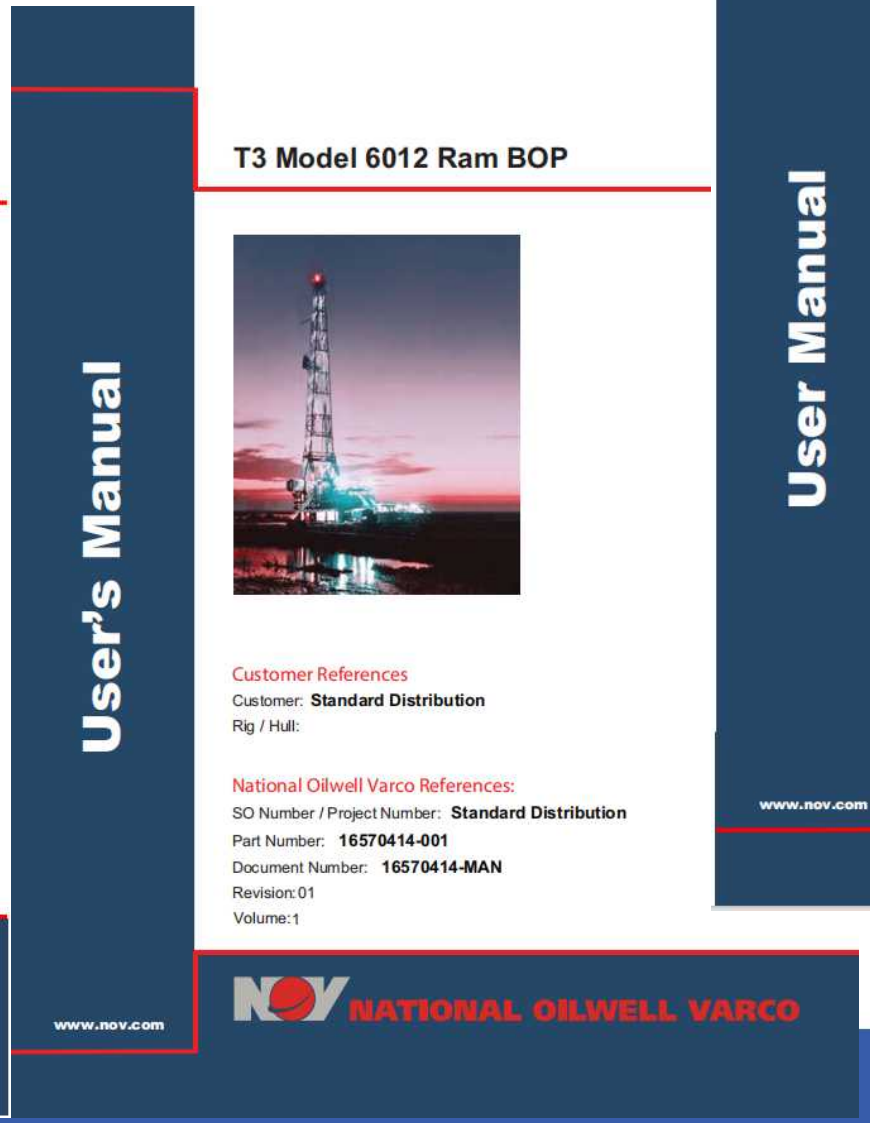

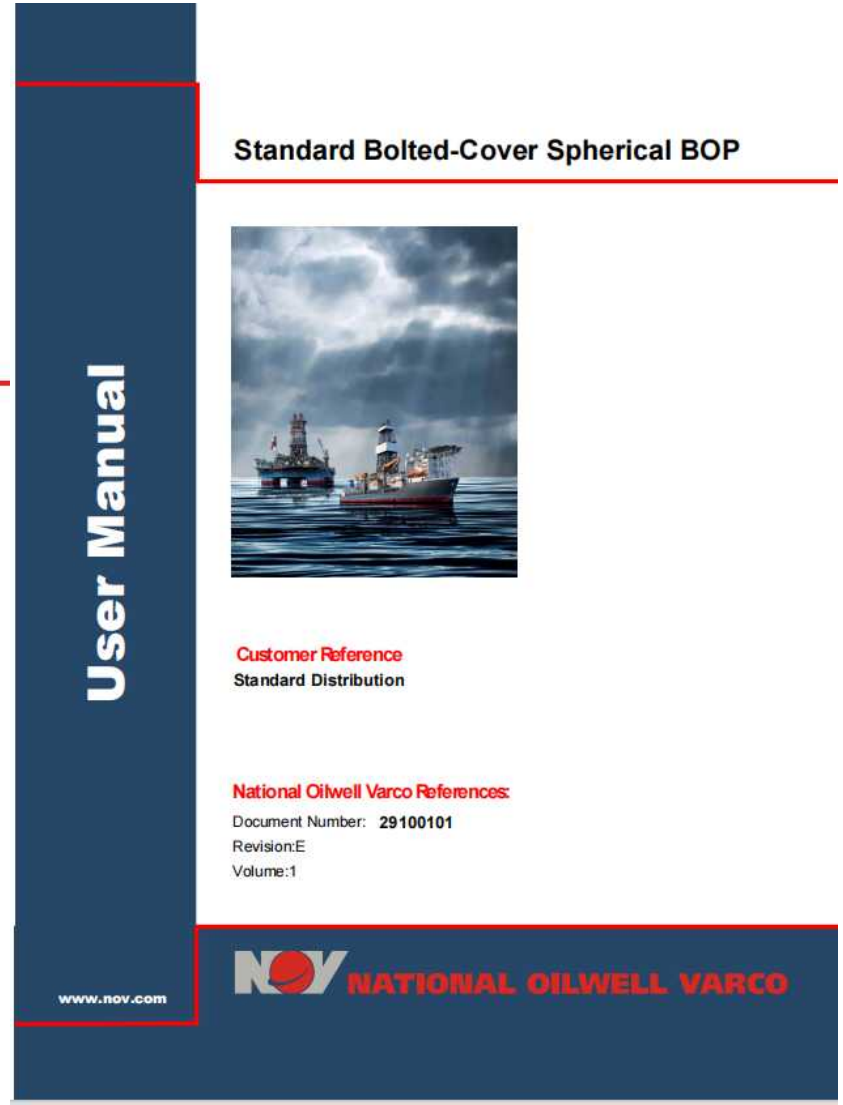

© Jakarta Drilling Society 2025

Drilling System & Rig Components

Drilling Instrumentation

© Jakarta Drilling Society 2025

Jakarta Drilling Society

Drilling Instrumentation

- Weight Indicator
- Rate of Penetration (ROP)
- Rotary RPM
- Rotary Torque
- Pump Stroke (SPM)
- Pump / Standpipe Pressure
- Casing Pressure

© Jakarta Drilling Society 2025

Drilling Instrumentation

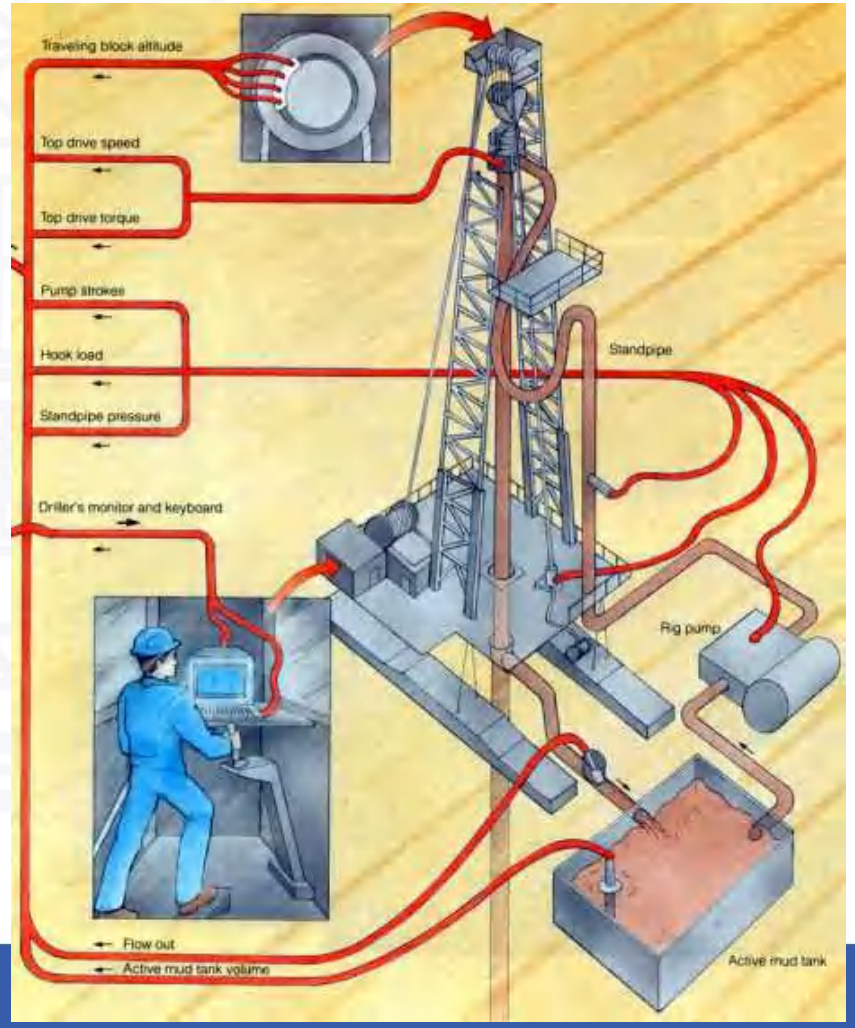

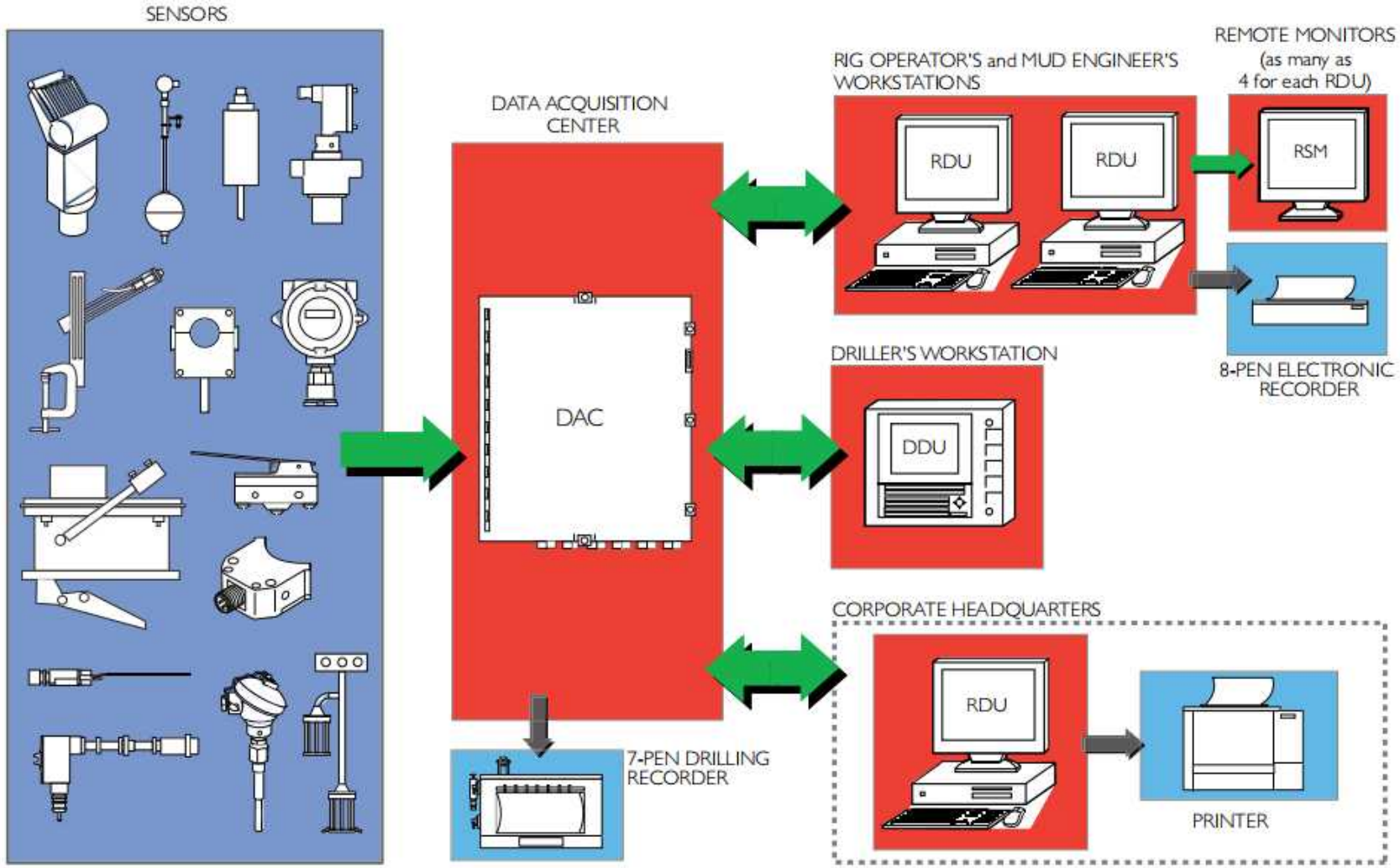

© Jakarta Drilling Society 2025

Drilling Instrumentation

ExtractToWord More

PVT (Pit Volume Totalizer)

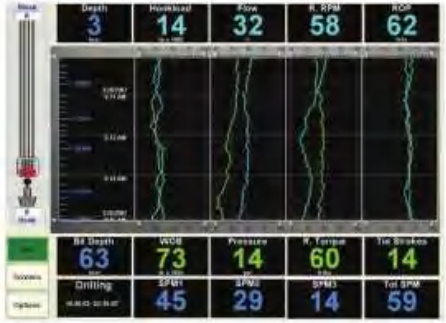

Trend

Drilling

Mud Pits

Weight Indicator

Digital

Trip

Menu

© Jakarta Drilling Society 2025

Drilling Instrumentation

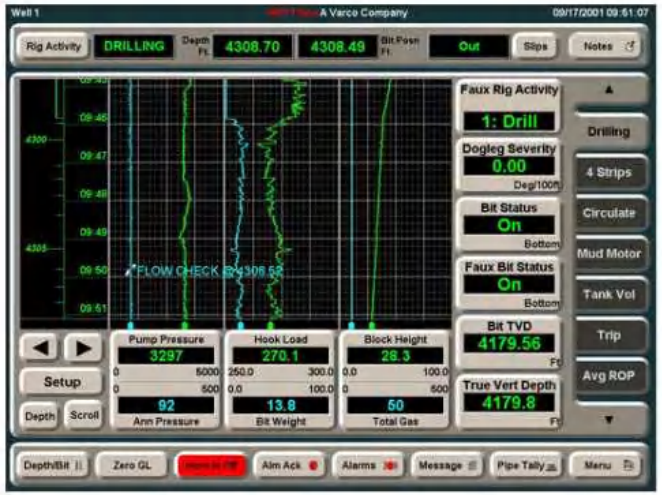

- View 3

- View 4

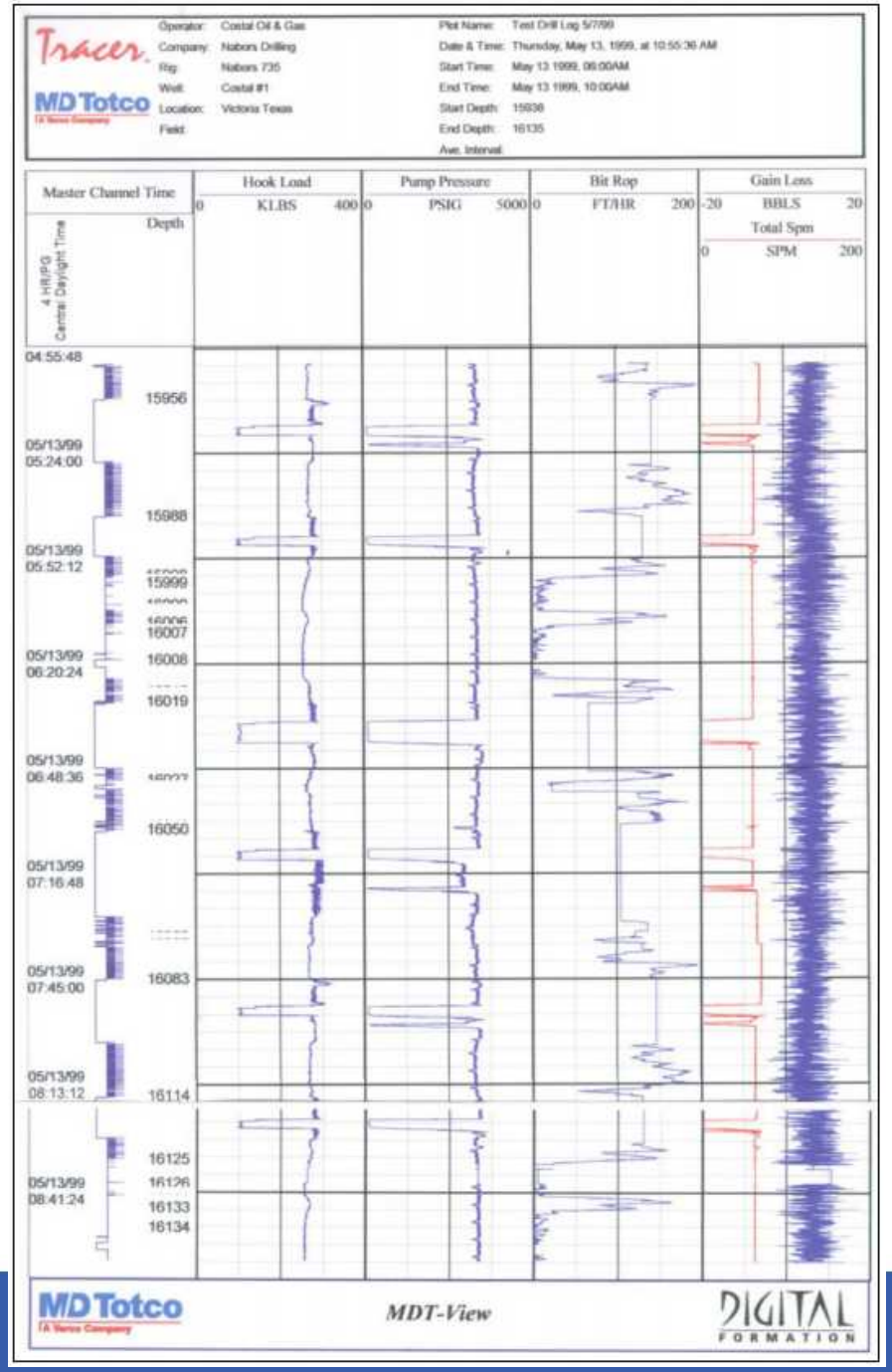

© Jakarta Drilling Society 2025

Drilling Instrumentation

© Jakarta Drilling Society 2025

Drilling Instrumentation

Compact Driller's Panel with
EB Weight Indicator

© Jakarta Drilling Society 2025

Drilling Instrumentation

Type EB Weight Indicator

FA9-1 Hydro-Mech comes complete with idler assembly, indicating gauge and hoses

© Jakarta Drilling Society 2025

Drilling Instrumentation

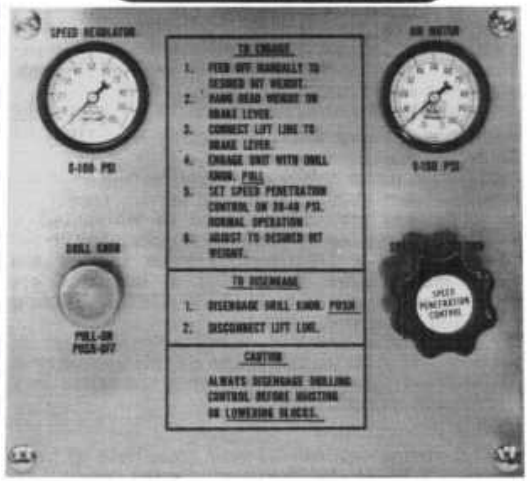

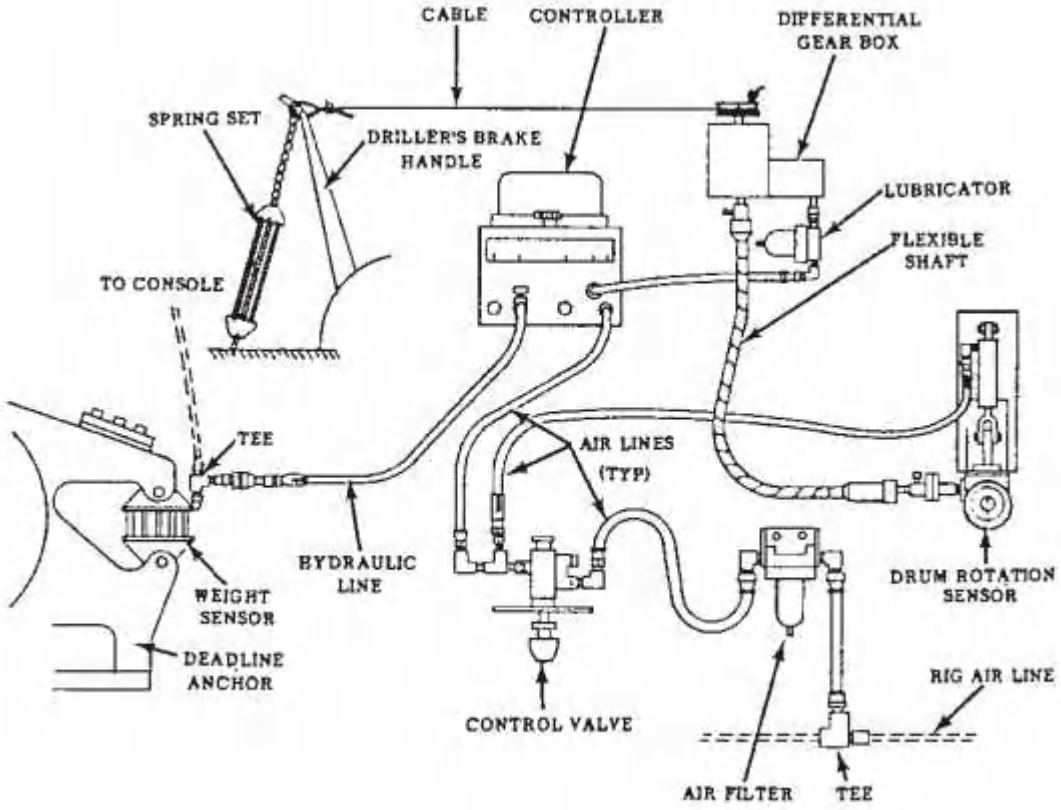

© Jakarta Drilling Society 2025

Drilling System & Rig Components

Drilling String & BHA

© Jakarta Drilling Society 2025

Jakarta Drilling Society

Drilling String & Bottom Hole Assembly (BHA)

- Drill Pipe
- Bottom Hole Assembly
  - Heavy Weight Drill Pipe (HWDP)
  - Drill Collar (DC)
  - Stabilizer
  - Bit Sub & Cross Over (X/O)

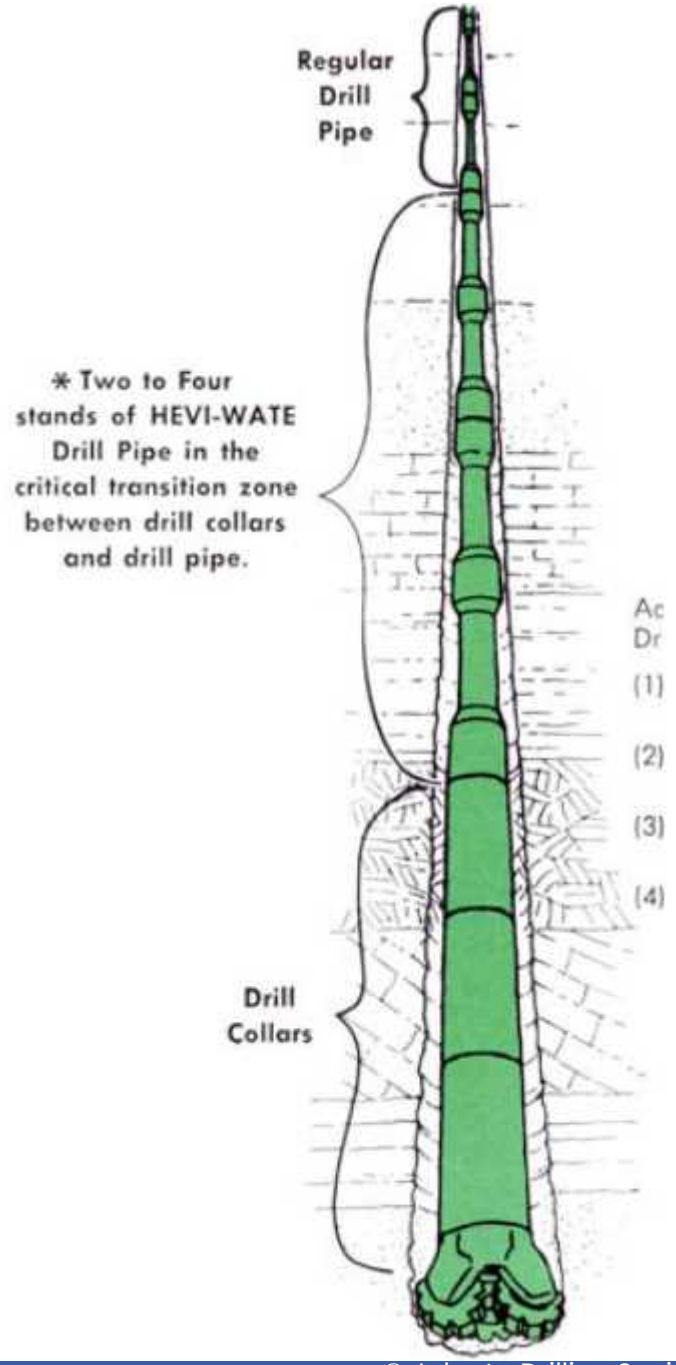

© Jakarta Drilling Society 2025

Drilling String & Bottom Hole Assembly

A joint of drill pipe is composed of 2 parts: the body and the tool joint.

Body: central part

Tool Joint: connections welded to each end of the pipe body and threaded - one box thread and one pin thread.

API 5D specifies the dimensions and characteristics of the body.
API 7 specifies the dimensions and characteristics of the tool joint
The ISO reference is the draft 11961.
ENI requirements are defined by internal specification.

Drill Pipe - Scheme

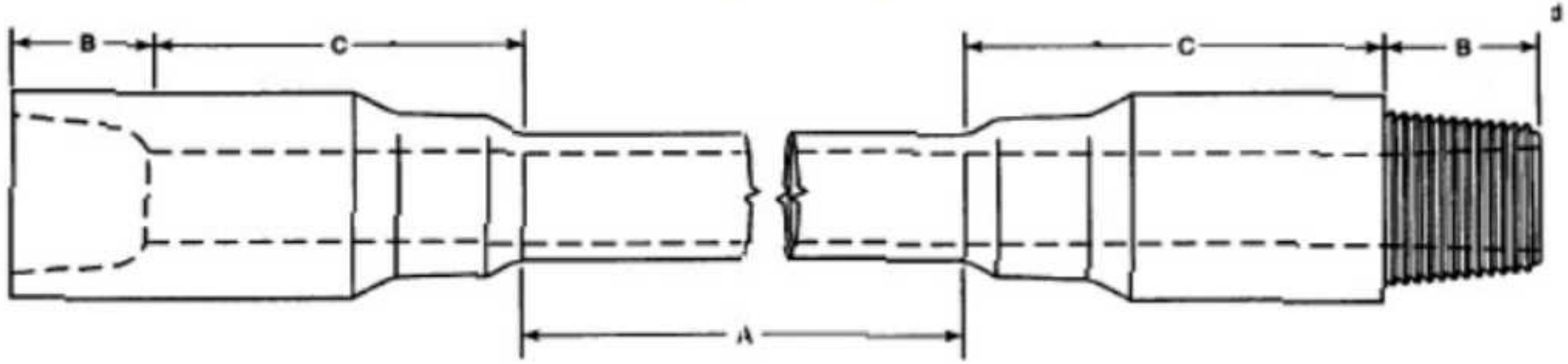

© Jakarta Drilling Society 2025

Drilling String & Bottom Hole Assembly

Jakarta Drilling Society

© Jakarta Drilling Society 2025

DRILL PIPE DATA TABLES

The following tables provide data for the drill string. Data are given for the pipe body, tool joint, and drill pipe assembly in Class 1 (new) condition. The tool joint sizes displayed represent common O.D. and I. D. configurtions, although additional size combinations are available. Grant Prideco offers all API tool joint connections as well as most non-API connections. Custom specifications and special sizes can be provided to meet specific requirements. The technical data are calculated per API RP7G, 16th Edition, December 1, 1998 and API Spec 5D, 5th Edition, April 30, 2002. While every effort has been made to insure the accuracy of the tables herein, this material is presented as a reference guide only. The technical information contained herein should not be construed as a recommendation. Grant Prideco can not assume responsibility for the results obtained through the use of this material. No expressed and implied warranty is intended. *Tong space is 2" longer than standard

Pipe Data												Tool Joint Data									Assembly Data					
Size OD	Nominal Weight	Grade and Upset Type	Torsional Yield Strength	Tensile Yield Strength	Wall Thickness	Nominal ID	Pipe Body Section Area	Pipe Body Section Modulus	Pipe Body Polar Section Modulus	Internal Pressure	Collapse Pressure	Connection Type	Outside Diameter	Inside Diameter	Torsional Yield Strength	Tensile Yield Strength	Make-up Torque	Torsional Ratio Tool Joint to Pipe	* Pin Tong Space	* Box Tong Space	Adjusted Weight	Minimum Tool Joint O.D. for Prem. Class	Drift Diameter	Capacity	Displace-ment	Size O.D.
	9.50	G-105 EU	19,800	272,000	0.254	2.992	2.590	1.961	3.923	13,335	13,055	3-1/2 SLH90	4 3/4	2 11/16	18,700	534,200	11,100	0.94	10	12.5	11.07	4 5/16	2 9/16	0.360	0.169	
	9.50	G-105 IU	19,800	272,000	0.254	2.992	2.590	1.961	3.923	13,335	13,055	XT31	4	2 1/8	18,600	415,100	11,200	0.94	10	15	10.61	3 11/16	2	0.352	0.162	
	9.50	G-105 EU	19,800	272,000	0.254	2.992	2.590	1.961	3.923	13,335	13,055	XT38	4 3/4	2 13/16	23,900	473,000	14,300	1.21	10	15	11.08	4 5/32	2 11/16	0.362	0.170	
3 1/2	9.50	S-135 EU	25,500	349,700	0.254	2.992	2.590	1.961	3.923	17,145	15,748	NC38	4 7/8	2 9/16	20,200	649,200	10,700	0.79	10	12.5	11.45	4 21/32	2 7/16	0.358	0.175	3 1/2
	9.50	S-135 IU	25,500	349,700	0.254	2.992	2.590	1.961	3.923	17,145	15,748	NC31	4 1/8	2	13,200	495,700	7,100	0.52	9	11	10.61	NA	1 7/8	0.352	0.162	
	9.50	S-135 IU	25,500	349,700	0.254	2.992	2.590	1.961	3.923	17,145	15,748	HT31	4 1/8	2	18,900	495,700	11,300	0.74	9	13	10.74	4	1 7/8	0.351	0.164	
	9.50	S-135 EU	25,500	349,700	0.254	2.992	2.590	1.961	3.923	17,145	15,748	HT38	4 3/4	2 11/16	25,300	587,300	15,200	0.99	10	15.5	11.31	4 7/16	2 9/16	0.360	0.173	
	9.50	S-135 EU	25,500	349,700	0.254	2.992	2.590	1.961	3.923	17,145	15,748	3-1/2 SLH90	4 3/4	2 9/16	20,900	596,100	12,400	0.82	10	12.5	11.24	4 7/16	2 7/16	0.358	0.172	
	9.50	S-135 IU	25,500	349,700	0.254	2.992	2.590	1.961	3.923	17,145	15,748	XT31	4	2	20,400	463,700	12,200	0.80	10	15	10.74	3 13/16	1 7/8	0.350	0.164	
	9.50	S-135 EU	25,500	349,700	0.254	2.992	2.590	1.961	3.923	17,145	15,748	XT38	4 3/4	2 13/16	23,900	473,000	14,300	0.94	10	15	11.08	4 9/32	2 11/16	0.362	0.170	
3 1/2	9.50	Z-140 IU	26,400	362,600	0.254	2.992	2.590	1.961	3.923	17,780	16,158	HT31	4 1/8	2	18,900	495,700	11,300	0.72	9	13	10.74	4 1/32	1 7/8	0.351	0.164	3 1/2
	9.50	Z-140 EU	26,400	362,600	0.254	2.992	2.590	1.961	3.923	17,780	16,158	HT38	4 3/4	2 11/16	25,300	587,300	15,200	0.96	10	15.5	11.31	4 15/32	2 9/16	0.360	0.173	
	9.50	Z-140 IU	26,400	362,600	0.254	2.992	2.590	1.961	3.923	17,780	16,158	XT31	4	2	20,400	463,700	12,200	0.77	10	15	10.74	3 27/32	1 7/8	0.350	0.164	
	9.50	Z-140 EU	26,400	362,600	0.254	2.992	2.590	1.961	3.923	17,780	16,158	XT38	4 3/4	2 13/16	23,900	473,000	14,300	0.91	10	15	11.08	4 5/16	2 11/16	0.362	0.170	
3 1/2	9.50	V-150 IU	28,300	388,500	0.254	2.992	2.590	1.961	3.923	19,050	16,943	HT31	4 1/4	1 3/4	23,400	584,100	14,000	0.83	9	13	11.14	4	1 5/8	0.348	0.170	3 1/2
	9.50	V-150 EU	28,300	388,500	0.254	2.992	2.590	1.961	3.923	19,050	16,943	HT38	4 3/4	2 11/16	25,300	587,300	15,200	0.89	10	15.5	11.31	4 1/2	2 9/16	0.360	0.173	
	9.50	V-150 IU	28,300	388,500	0.254	2.992	2.590	1.961	3.923	19,050	16,943	XT31	4	2	20,400	463,700	12,200	0.72	10	15	10.74	3 29/32	1 7/8	0.350	0.164	
	9.50	V-150 EU	28,300	388,500	0.254	2.992	2.590	1.961	3.923	19,050	16,943	XT38	4 3/4	2 13/16	23,900	473,000	14,300	0.84	10	15	11.08	4 11/32	2 11/16	0.362	0.170	
3 1/2	13.30	E-75 EU	18,600	271,600	0.368	2.764	3.621	2.572	5.144	13,800	14,113	NC38	4 3/4	2 11/16	18,100	587,300	9,700	0.97	10	12.5	14.24	4 1/2	2 9/16	0.310	0.218	3 1/2
	13.30	E-75 IU	18,600	271,600	0.368	2.764	3.621	2.572	5.144	13,800	14,113	NC31	4 1/8	2	13,200	495,700	7,100	0.71	9	11	13.93	4 1/32	1 7/8	0.302	0.213	
	13.30	E-75 IU	18,600	271,600	0.368	2.764	3.621	2.572	5.144	13,800	14,113	HT31	4 1/8	2 1/8	16,600	447,100	10,000	0.89	9	13	13.91	3 27/32	2	0.303	0.213	
	13.30	E-75 EU	18,600	271,600	0.368	2.764	3.621	2.572	5.144	13,800	14,113	HT38	4 3/4	2 11/16	25,300	587,300	15,200	1.36	10	15.5	14.45	4 1/4	2 9/16	0.310	0.221	
	13.30	E-75 EU	18,600	271,600	0.368	2.764	3.621	2.572	5.144	13,800	14,113	3-1/2 SLH90	4 3/4	2 11/16	18,700	534,200	11,100	1.01	10	12.5	14.24	4 9/32	2 9/16	0.310	0.218	
	13.30	E-75 IU	18,600	271,600	0.368	2.764	3.621	2.572	5.144	13,800	14,113	XT31	4	2 1/8	18,600	415,100	11,200	1.00	10	15	13.87	3 5/8	2	0.302	0.212	
	13.30	E-75 EU	18,600	271,600	0.368	2.764	3.621	2.572	5.144	13,800	14,113	XT38	4 3/4	2 11/16	27,700	537,800	16,600	1.49	10	15	14.42	4 1/32	2 9/16	0.310	0.221	
3 1/2	13.30	X-95 EU	23,500	344,000	0.368	2.764	3.621	2.572	5.144	17,480	17,877	NC38	5	2 9/16	20,300	649,200	10,700	0.86	10	12.5	14.84	4 19/32	2 7/16	0.308	0.227	3 1/2
	13.30	X-95 IU	23,500	344,000	0.368	2.764	3.621	2.572	5.144	17,480	17,877	NC31	4 1/8	2	13,200	495,700	7,100	0.56	9	11	13.93	NA	1 7/8	0.302	0.213	
	13.30	X-95 IU	23,500	344,000	0.368	2.764	3.621	2.572	5.144	17,480	17,877	HT31	4 1/8	2	18,900	495,700	11,300	0.80	9	13	14.04	3 15/16	1 7/8	0.301	0.215	
	13.30	X-95 EU	23,500	344,000	0.368	2.764	3.621	2.572	5.144	17,480	17,877	HT38	4 3/4	2 11/16	25,300	587,300	15,200	1.08	10	15.5	14.45	4 3/8	2 9/16	0.310	0.221	
	13.30	X-95 EU	23,500	344,000	0.368	2.764	3.621	2.572	5.144	17,480	17,877	3-1/2 SLH90	4 3/4	2 11/16	18,700	534,200	11,100	0.80	10	12.5	14.24	4 3/8	2 9/16	0.310	0.218	
	13.30	X-95 IU	23,500	344,000	0.368	2.764	3.621	2.572	5.144	17,480	17,877	XT31	4	2 1/8	18,600	415,100	11,200	0.79	10	15	13.87	3 25/32	2	0.302	0.212	
	13.30	X-95 EU	23,500	344,000	0.368	2.764	3.621	2.572	5.144	17,480	17,877	XT38	4 3/4	2 11/16	27,700	537,800	16,600	1.18	10	15	14.42	4 5/32	2 9/16	0.310	0.221	
3 1/2	13.30	G-105 EU	26,000	380,200	0.368	2.764	3.621	2.572	5.144	19,320	19,758	NC38	5	2 7/16	22,200	708,100	11,700	0.85	10	12.5	15.00	4 21/32	2 5/16	0.306	0.229	3 1/2
	13.30	G-105 IU	26,000	380,200	0.368	2.764	3.621	2.572	5.144	19,320	19,758	NC31	4 1/8	2	13,200	495,700	7,100	0.51	9	11	13.93	NA	1 7/8	0.302	0.213	
	13.30	G-105 IU	26,000	380,200	0.368	2.764	3.621	2.572	5.144	19,320	19,758	HT31	4 1/8	2	18,900	495,700	11,300	0.73	9	13	14.04	4	1 7/8	0.301	0.215	
	13.30	G-105 EU	26,000	380,200	0.368	2.764	3.621	2.572	5.144	19,320	19,758	HT38	4 3/4	2 11/16	25,300	587,300	15,200	0.97	10	15.5	14.45	4 7/16	2 9/16	0.310	0.221	
	13.30	G-105 EU	26,000	380,200	0.368	2.764	3.621	2.572	5.144	19,320	19,758	3-1/2 SLH90	4 3/4	2 9/16	20,900	596,100	12,400	0.80	10	12.5	14.41	4 7/16	2 7/16	0.308	0.220	
	13.30	G-105 IU	26,000	380,200	0.368	2.764	3.621	2.572	5.144	19,320	19,758	XT31	4 1/8	2	21,100	463,700	12,700	0.81	10	15	14.21	3 13/16	1 7/8	0.300	0.217	
	13.30	G-105 EU	26,000	380,200	0.368	2.764	3.621	2.572	5.144	19,320	19,758	XT38	4 3/4	2 11/16	27,700	537,800	16,600	1.07	10	15	14.42	4 7/32	2 9/16	0.310	0.221	
3 1/2	13.30	S-135 EU	33,400	488,800	0.368	2.764	3.621	2.572	5.144	24,840	25,404	NC38	5	2 1/8	26,500	842,400	14,000	0.79	10	12.5	15.37	4 13/16	2	0.302	0.235	3 1/2
	13.30	S-135 IU	33,400	488,800	0.368	2.764	3.621	2.572	5.144	24,840	25,404	NC31	4 1/8	2	13,200	495,700	7,100	0.40	9	11	13.93	NA	1 7/8	0.302	0.213	
	13.30	S-135 IU	33,400	488,800	0.368	2.764	3.621	2.572	5.144	24,840	25,404	HT31	4 1/8	2	18,900	495,700	11,300	0.57	9	13	14.04	NA	1 7/8	0.301	0.215	
	13.30	S-135 EU	33,400	488,800	0.368	2.764	3.621	2.572	5.144	24,840	25,404	HT38	4 3/4	2 9/16	26,900	649,200	16,100	0.81	10	15.5	14.63	4 9/16	2 7/16	0.308	0.224	
	13.30	S-135 EU	33,400	488,800	0.368	2.764	3.621	2.572	5.144	24,840	25,404	3-1/2 SLH90	4 3/4	2 9/16	20,900	596,100	12,400	0.63	10	12.5	14.41	4 19/32	2 7/16	0.308	0.220	
	13.30	S-135 IU	33,400	488,800	0.368	2.764	3.621	2.572	5.144	24,840	25,404	XT31	4 1/8	1 7/8	23,400	509,400	14,000	0.70	10	15	14.34	3 31/32	1 3/4	0.298	0.219	
	13.30	S-135 EU	33,400	488,800	0.368	2.764	3.621	2.572	5.144	24,840	25,404	XT38	4 3/4	2 11/16	27,700	537,800	16,600	0.83	10	15	14.42	4 13/32	2 9/16	0.310	0.221	
	13.30	S-135 EU	33,400	488,800	0.368	2.764	3.621	2.572	5.144	24,840	25,404	GPDS38	4 7/8	2 9/16	25,700	649,200	15,400	0.77	10	12.5	14.62	4 11/16	2 7/16	0.308	0.224	

© Jakarta Drilling Society 2025

DRILL PIPE DATA TABLES

The following tables provide data for the drill string. Data are given for the pipe body, tool joint, and drill pipe assembly in Class 1 (new) condition. The tool joint sizes displayed represent common O.D. and I. D. configurtions, although additional size combinations are available. Grant Prideco offers all API tool joint connections as well as most non-API connections. Custom specifications and special sizes can be provided to meet specific requirements. The technical data are calculated per API RP7G, 16th Edition, December 1, 1998 and API Spec 5D, 5th Edition, April 30, 2002. While every effort has been made to insure the accuracy of the tables herein, this material is presented as a reference guide only. The technical information contained herein should not be construed as a recommendation. Grant Prideco can not assume responsibility for the results obtained through the use of this material. No expressed and implied warranty is intended. *Tong space is 2" longer than standard

Pipe Data												Tool Joint Data									Assembly Data					
Size OD	Nominal Weight	Grade and Upset Type	Torsional Yield Strength	Tensile Yield Strength	Wall Thickness	Nominal ID	Pipe Body Section Area	Pipe Body Section Modulus	Pipe Body Polar Section Modulus	Internal Pressure	Collapse Pressure	Connection Type	Outside Diameter	Inside Diameter	Torsional Yield Strength	Tensile Yield Strength	Make-up Torque	Torsional Ratio Tool Joint to Pipe	* Pin Tong Space	* Box Tong Space	Adjusted Weight	Minimum Tool Joint O.D. for Prem. Class	Drift Diameter	Capacity	Displace-ment	Size O.D.
5	19.50	E-75 IEU	41,200	395,600	0.362	4.276	5.275	5.708	11.415	9,503	9,962	NC50	6 5/8	3 3/4	38,100	939,100	19,800	0.92	9	12	22.12	5 7/8	3 5/8	0.733	0.338	5
	19.50	E-75 IEU	41,200	395,600	0.362	4.276	5.275	5.708	11.415	9,503	9,962	HT50	6 5/8	3 3/4	53,300	939,100	32,000	1.29	9	15	22.57	5 13/16	3 5/8	0.732	0.345	
	19.50	E-75 IEU	41,200	395,600	0.362	4.276	5.275	5.708	11.415	9,503	9,962	5-1/2 FH	7	3 3/4	62,900	1,448,400	33,400	1.53	10	12	23.20	6 3/8	3 5/8	0.732	0.355	
	19.50	E-75 IEU	41,200	395,600	0.362	4.276	5.275	5.708	11.415	9,503	9,962	XT46	6	3 1/2	36,500	910,300	21,900	0.89	10	15	21.69	5 5/8	3 3/8	0.726	0.332	
	19.50	E-75 IEU	41,200	395,600	0.362	4.276	5.275	5.708	11.415	9,503	9,962	XT50	6 1/2	4	38,700	902,900	23,200	0.94	10	15	21.83	5 31/32	3 7/8	0.738	0.334	
5	19.50	X-95 IEU	52,100	501,100	0.362	4.276	5.275	5.708	11.415	12,037	12,026	NC50	6 5/8	3 1/2	45,100	1,109,900	23,400	0.87	9	12	22.61	6 1/32	3 3/8	0.727	0.346	5
	19.50	X-95 IEU	52,100	501,100	0.362	4.276	5.275	5.708	11.415	12,037	12,026	HT50	6 5/8	3 3/4	53,300	939,100	32,000	1.02	9	15	22.57	5 13/16	3 5/8	0.732	0.345	
	19.50	X-95 IEU	52,100	501,100	0.362	4.276	5.275	5.708	11.415	12,037	12,026	5-1/2 FH	7	3 3/4	62,900	1,448,400	33,400	1.21	10	12	23.20	6 1/2	3 5/8	0.732	0.355	
	19.50	X-95 IEU	52,100	501,100	0.362	4.276	5.275	5.708	11.415	12,037	12,026	XT46	6	3 1/2	58,100	910,300	34,900	1.12	10	15	21.69	5 5/8	3 3/8	0.726	0.332	
	19.50	X-95 IEU	52,100	501,100	0.362	4.276	5.275	5.708	11.415	12,037	12,026	XT50	6 1/2	4	62,500	902,900	37,500	1.20	10	15	21.83	5 31/32	3 7/8	0.738	0.334	
5	19.50	G-105 IEU	57,600	553,800	0.362	4.276	5.275	5.708	11.415	13,304	12,999	NC50	6 5/8	3 1/4	51,700	1,269,000	26,800	0.90	9	12	23.07	6 3/32	3 1/8	0.722	0.353	5
	19.50	G-105 IEU	57,600	553,800	0.362	4.276	5.275	5.708	11.415	13,304	12,999	HT50	6 5/8	3 1/2	66,200	1,109,900	39,700	1.15	9	15	23.10	5 13/16	3 3/8	0.726	0.353	
	19.50	G-105 IEU	57,600	553,800	0.362	4.276	5.275	5.708	11.415	13,304	12,999	5-1/2 FH	7	3 3/4	62,900	1,448,400	33,400	1.09	10	12	23.20	6 9/16	3 5/8	0.732	0.355	
	19.50	G-105 IEU	57,600	553,800	0.362	4.276	5.275	5.708	11.415	13,304	12,999	XT46	6	3 1/2	58,100	910,300	34,900	1.01	10	15	21.69	5 5/8	3 3/8	0.726	0.332	
	19.50	G-105 IEU	57,600	553,800	0.362	4.276	5.275	5.708	11.415	13,304	12,999	XT50	6 1/2	4	62,500	902,900	37,500	1.09	10	15	21.83	5 31/32	3 7/8	0.738	0.334	
	19.50	G-105 IEU	57,600	553,800	0.362	4.276	5.275	5.708	11.415	13,304	12,999	GPDS50	6 5/8	3 1/2	60,400	1,110,200	36,200	1.05	9	12	22.61	5 13/16	3 3/8	0.727	0.346	
5	19.50	S-135 IEU	74,100	712,100	0.362	4.276	5.275	5.708	11.415	17,105	15,672	NC50	6 5/8	2 3/4	63,400	1,551,700	32,900	0.86	9	12	23.89	6 5/16	2 5/8	0.713	0.365	5
	19.50	S-135 IEU	74,100	712,100	0.362	4.276	5.275	5.708	11.415	17,105	15,672	HT50	6 5/8	3 1/2	66,200	1,109,900	39,700	0.89	9	15	23.10	5 15/16	3 3/8	0.726	0.353	
	19.50	S-135 IEU	74,100	712,100	0.362	4.276	5.275	5.708	11.415	17,105	15,672	5-1/2 FH	7 1/4	3 1/2	72,500	1,619,200	37,400	0.98	10	12	24.38	6 3/4	3 3/8	0.726	0.373	
	19.50	S-135 IEU	74,100	712,100	0.362	4.276	5.275	5.708	11.415	17,105	15,672	XT46	6	3 1/2	58,100	910,300	34,900	0.78	10	15	21.69	5 23/32	3 3/8	0.726	0.332	
	19.50	S-135 IEU	74,100	712,100	0.362	4.276	5.275	5.708	11.415	17,105	15,672	XT50	6 1/2	3 3/4	77,000	1,085,500	46,200	1.04	10	15	22.39	5 31/32	3 5/8	0.731	0.343	
	19.50	S-135 IEU	74,100	712,100	0.362	4.276	5.275	5.708	11.415	17,105	15,672	GPDS50	6 5/8	3 1/2	60,400	1,110,200	36,200	0.82	9	12	22.61	6 1/32	3 3/8	0.727	0.346	
5	19.50	Z-140 IEU	76,800	738,400	0.362	4.276	5.275	5.708	11.415	17,738	16,079	HT50	6 5/8	3 1/2	66,200	1,109,900	39,700	0.86	9	15	23.10	5 31/32	3 3/8	0.726	0.353	5
	19.50	Z-140 IEU	76,800	738,400	0.362	4.276	5.275	5.708	11.415	17,738	16,079	XT46	6	3 1/2	58,100	910,300	34,900	0.76	10	15	21.69	5 25/32	3 3/8	0.726	0.332	
	19.50	Z-140 IEU	76,800	738,400	0.362	4.276	5.275	5.708	11.415	17,738	16,079	XT50	6 1/2	3 3/4	77,000	1,085,500	46,200	1.00	10	15	22.39	5 31/32	3 5/8	0.731	0.343	
	19.50	Z-140 IEU	76,800	738,400	0.362	4.276	5.275	5.708	11.415	17,738	16,079	GPDS50	6 5/8	3 1/2	60,400	1,110,200	36,200	0.79	9	12	22.61	6 3/32	3 3/8	0.727	0.346	
5	19.50	V-150 IEU	82,300	791,200	0.362	4.276	5.275	5.708	11.415	19,005	16,858	HT50	6 5/8	3 1/2	66,200	1,109,900	39,700	0.80	9	15	23.10	6 1/32	3 3/8	0.726	0.353	5
	19.50	V-150 IEU	82,300	791,200	0.362	4.276	5.275	5.708	11.415	19,005	16,858	XT46	6 1/4	3 1/4	70,200	1,069,300	42,100	0.85	10	15	22.78	5 23/32	3 1/8	0.720	0.348	
	19.50	V-150 IEU	82,300	791,200	0.362	4.276	5.275	5.708	11.415	19,005	16,858	XT50	6 1/2	3 3/4	77,000	1,085,500	46,200	0.94	10	15	22.39	5 31/32	3 5/8	0.731	0.343	
	19.50	V-150 IEU	82,300	791,200	0.362	4.276	5.275	5.708	11.415	19,005	16,858	GPDS50	6 5/8	3 1/2	60,400	1,110,200	36,200	0.73	9	12	22.61	6 5/32	3 3/8	0.727	0.346	
5	25.60	E-75 IEU	52,300	530,100	0.500	4.000	7.069	7.245	14.491	13,125	13,500	NC50	6 5/8	3 1/2	45,100	1,109,900	23,400	0.86	9	12	28.08	6 1/32	3 3/8	0.641	0.430	5
	25.60	E-75 IEU	52,300	530,100	0.500	4.000	7.069	7.245	14.491	13,125	13,500	HT50	6 5/8	3 3/4	53,300	939,100	32,000	1.02	9	15	28.01	5 13/16	3 5/8	0.646	0.428	
	25.60	E-75 IEU	52,300	530,100	0.500	4.000	7.069	7.245	14.491	13,125	13,500	5-1/2 FH	7	3 1/2	62,900	1,619,200	37,400	1.20	10	12	29.16	6 1/2	3 3/8	0.641	0.446	
	25.60	E-75 IEU	52,300	530,100	0.500	4.000	7.069	7.245	14.491	13,125	13,500	XT50	6 5/8	3 3/4	77,300	1,085,500	46,400	1.48	10	15	28.14	5 31/32	3 5/8	0.646	0.430	
5	25.60	X-95 IEU	66,200	671,500	0.500	4.000	7.069	7.245	14.491	16,625	17,100	NC50	6 5/8	3	57,800	1,416,200	30,000	0.87	9	12	28.97	6 7/32	2 7/8	0.631	0.443	5
	25.60	X-95 IEU	66,200	671,500	0.500	4.000	7.069	7.245	14.491	16,625	17,100	HT50	6 5/8	3 1/2	66,200	1,109,900	39,700	1.00	9	15	28.53	5 13/16	3 3/8	0.640	0.436	
	25.60	X-95 IEU	66,200	671,500	0.500	4.000	7.069	7.245	14.491	16,625	17,100	5-1/2 FH	7	3 1/2	62,900	1,619,200	37,400	0.95	10	12	29.16	6 21/32	3 3/8	0.641	0.446	
	25.60	X-95 IEU	66,200	671,500	0.500	4.000	7.069	7.245	14.491	16,625	17,100	XT50	6 5/8	3 3/4	77,300	1,085,500	46,400	1.17	10	15	28.14	5 31/32	3 5/8	0.646	0.430	
5	25.60	G-105 IEU	73,200	742,200	0.500	4.000	7.069	7.245	14.491	18,375	18,900	NC50	6 5/8	2 3/4	63,400	1,551,700	32,900	0.87	9	12	29.36	6 9/32	2 5/8	0.627	0.449	5
	25.60	G-105 IEU	73,200	742,200	0.500	4.000	7.069	7.245	14.491	18,375	18,900	HT50	6 5/8	3 1/2	66,200	1,109,900	39,700	0.90	9	15	28.53	5 29/32	3 3/8	0.640	0.436	
	25.60	G-105 IEU	73,200	742,200	0.500	4.000	7.069	7.245	14.491	18,375	18,900	5-1/2 FH	7 1/4	3 1/2	72,500	1,619,200	37,400	0.99	10	12	29.82	6 23/32	3 3/8	0.640	0.456	
	25.60	G-105 IEU	73,200	742,200	0.500	4.000	7.069	7.245	14.491	18,375	18,900	XT50	6 5/8	3 3/4	77,300	1,085,500	46,400	1.06	10	15	28.14	5 31/32	3 5/8	0.646	0.430	
	25.60	G-105 IEU	73,200	742,200	0.500	4.000	7.069	7.245	14.491	18,375	18,900	GPDS50	6 5/8	3 1/2	60,400	1,110,200	36,200	0.83	9	12	28.08	6 1/32	3 3/8	0.641	0.430	
5	25.60	S-135 IEU	94,100	954,300	0.500	4.000	7.069	7.245	14.491	23,625	24,300	NC50	6 5/8	2 3/4	63,400	1,551,700	32,900	0.67	9	12	29.36	6 17/32	2 5/8	0.627	0.449	5
	25.60	S-135 IEU	94,100	954,300	0.500	4.000	7.069	7.245	14.491	23,625	24,300	HT50	6 5/8	3 1/2	66,200	1,109,900	39,700	0.70	9	15	28.53	6 3/16	3 3/8	0.640	0.436	
	25.60	S-135 IEU	94,100	954,300	0.500	4.000	7.069	7.245	14.491	23,625	24,300	5-1/2 FH	7 1/4	3 1/4	78,700	1,778,300	41,200	0.84	10	12	30.30	6 15/16	3 1/8	0.635	0.464	
	25.60	S-135 IEU	94,100	954,300	0.500	4.000	7.069	7.245	14.491	23,625	24,300	XT50	6 5/8	3 1/2	90,700	1,256,300	54,400	0.96	10	15	28.67	5 31/32	3 3/8	0.640	0.439	
	25.60	S-135 IEU	94,100	954,300	0.500	4.000	7.069	7.245	14.491	23,625	24,300	GPDS50	6 5/8	3 1/2	60,400	1,110,200	36,200	0.64	9	12	28.08	6 9/32	3 3/8	0.641	0.430	

© Jakarta Drilling Society 2025

Drilling String & Bottom Hole Assembly

SINGLE SHOULDER CONNECTION																	
	NC26	NC31	NC38	NC40	NC46	NC50	2 3/8 IF	2 7/8 IF	3 ½ IF	4 FH	4 IF	4 ½ IF	2 7/8 SH	3 ½ SH	4 ½ SH	4 ½ XH	5 XH
NC26	X						X						X				
NC31		X						X						X			
NC38			X						X						X		
NC40				X						X							
NC46					X						X					X	
NC50						X						X					X
2 3/8 IF	X						X						X				
2 7/8 IF		X						X						X			
3 ½ IF			X						X						X		
4 FH				X						X							
4 IF					X						X					X	
4 ½ IF						X						X					X
2 7/8 SH	X						X						X				
3 ½ SH		X						X						X			
4 ½ SH			X						X						X		
4 ½ XH					X						X					X	
5 XH						X						X					X

© Jakarta Drilling Society 2025

Drilling String & Bottom Hole Assembly

QUAIL TOOLS

Drill Pipe Specification & Performance Data Sheet

5", 19.50#, 0.362", G105, IEU, R2

NC50 (4-1/2"IF) - 6.625" x 3.250"

QT Item #: 9807

Tube / Pipe Body Specification		
OD:	5.000	in
ID:	4.276	in
Wall Thickness:	0.362	in
Weight (nominal):	19.50	lbs/ft
Grade:	G105	
Range:	R2	
Upset Type:	IEU	
Maximum Upset OD:	5.125	in

Tubular Assembly		
Adjusted Weight:	24.11	lbs/ft
Length (approximate):	30 - 32	ft
Box TJ Length (nominal):	14	in
Pin TJ Length (nominal):	11	in
Fluid Displacement:	0.0088	bbls/ft
Fluid Capacity w/ IPC:	0.0169	bbls/ft

An oilfield barrel equals 42 US gallons.

Tube / Pipe Body Performance		
Inspection Class:	**Premium Class 80%**	
Remaining Body Wall:	0.290	in
Tensile Strength:	436,150	lbs
Torsional Strength:	45,200	ft-lbs
Burst Capacity:	12,160	psi
Collapse Capacity:	8,760	psi

Notes:
-Dimensions, wall thickness, and tool joint lengths shown above are nominal if not otherwise stated.
-Values shown may vary with actual values due to OEM tolerances, rounding, and other factors.
-Capacity, Displacement, & Adjusted Weight are best estimates from the OEM and are based on pipe purchased at 95% RBW with longer than standard tool joints. Nominal thickness of IPC is .009" when applied.

Notes:
-Tube / Pipe body properties are calculated based on uniform OD and wall thickness.

Connection / Tool Joint Specification		
Connection:	**NC50 (4-1/2"IF)**	
OD:	6.625	in
ID:	3.250	in
SMYS:	120	ksi
Drift Size:	3.125	in
Elevator Taper:	18°	

Connection Performance			
Thread Compound Friction Factor (FF):	**1.0 FF**	**1.15 FF**	
Maximum Make-Up Torque: (Recommended)	**30,700**	**35,305**	ft-lbs
Tension at Maximum Make-Up Torque:	1,118,500	1,118,500	lbs
Minimum Make-Up Torque:	**25,600**	**29,440**	ft-lbs
Tension at Minimum Make-Up Torque:	1,130,300	1,130,300	lbs
Torsional Strength:	**51,200**	**58,880**	ft-lbs

Notes:
-Above dimensions are nominal.
-There is no published pressure rating for this connection.

The Maximum Make-Up Torque based on the appropriate thread compound friction factor (FF) is recommended. MUTs lower than maximum should only be applied when MUT is limited by rig equipment or connection tensile capacity. MUT values lower than Minimum MUT should never be used.

Adjust MUT values per the applied thread compound's FF greater than 1.0, without exceeding 1.15. Above values tabulated at 1.0 and 1.15 FF.

JDS Jakarta Drilling Society

© Jakarta Drilling Society 2025

Drilling String & Bottom Hole Assembly

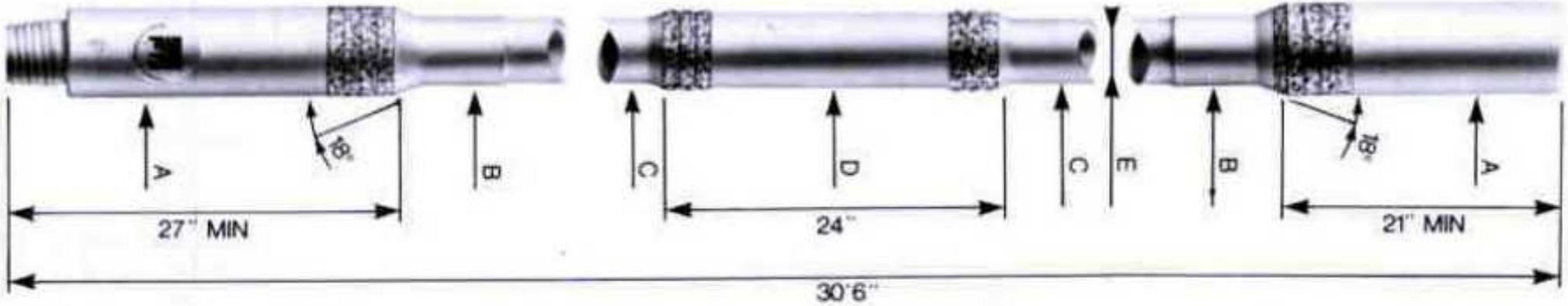

Range 2 - 30'6"

Nominal size C (in)	Tool Joint					Tube					Approx. Weigth (kg)	Make-up torque (ft x lbs)
	Tool Joint OD A (in)	ID (in)	Connection size	Tensile Yield (lbs)	Torsional Yield (ft x lbs)	Upsets Center D (in)	Upsets Ends B (in)	ID E (in)	Tensile Yield (lbs)	Torsional Yield (ft x lbs)		
6⅝	8¼	4	6⅝ FH	2 248 700	116 700	7	6¾	5	1 112 700	139 000	940	60 800
5½	7	3⅝	5½ FH	1 399 600	59 100	6	5 11/16	3⅝	1 007 800	95 500	720	30 800
5	6½	3	NC 50 (4½ IF)	1 384 200	56 900	5½	5⅛	3	942 400	77 000	680	29 700
4½	6¼	2 13/16	NC 46 (4 IF)	1 133 500	54 600	5	4⅝	2 13/16	726 800	54 600	555	22 700
4	5¼	2½	NC 40 (4 FH)	852 600	38 400	4½	4⅛	2½	574 300	38 400	425	15 000
3½	4¾	2 1/16	NC 38 (3½ IF)	606 600	26 600	4	3⅝	2 1/16	471 000	26 600	350	10 000

© Jakarta Drilling Society 2025

Drilling String & Bottom Hole Assembly

© Jakarta Drilling Society 2025

HEAVY WEIGHT DRILL PIPE DATA

Nominal Size OD inches	Pipe Body Type	Pipe Body Tube ID inches	Pipe Body Elevator Upset Ø inches	Pipe Body Central Upset Ø inches	Pipe Body Torsional Strength ft-lbs	Pipe Body Tensile Strength lbs	Tool Joints OD inches	Tool Joints ID inches	Tool Joints Connections		Tool Joints Recommended Make-Up Torque ft-lbs	Tool Joints Torsional Strength ft-lbs	Tensile Strength lbs	Approx. Weight Stan-dard lbs	Approx. Weight Stan-dard Kg	Approx. Weight Spiral lbs	Approx. Weight Spiral Kg
									Preferred	Other							
3 1/2	Integral	2 1/16	3 7/8	4	39 157	690 800	4 3/4	2 1/16	NC 38	3 1/2 IF	11 500	19 170	852 740	785	356	915	415
3 1/2	Integral	2 1/16	3 7/8	4	39 157	690 800	5	2 1/16	NC 38	3 1/2 IF	16 700	26 700	852 740	810	367	941	427
3 1/2	Integral	2 1/4	3 7/8	4	39 157	690 800	4 3/4	2 1/4	NC 38	3 1/2 IF	11 500	19170	852 740	785	356	915	415
3 1/2	Integral	2 1/4	3 7/8	4	39 157	690 800	5	2 1/4	NC 38	3 1/2 IF	16 070	26 780	852 740	810	367	941	427
4	Integral	2 1/2	4 3/16	4 1/2	55 272	815 000	5 1/4	2 1/2	NC 40	4 FH	16 600	24 400	728 670	917	416	1 050	476
4 1/2	Integral	2 3/4	4 11/16	5	81 400	1 096 100	6 1/4	2 3/4	NC 46	4 IF	26 600	39 860	1 052 760	1 260	572	1 390	630
4 1/2	Integral	2 13/16	4 11/16	5	80 196	1 066 000	6 1/4	2 13/16	NC 46	4 IF	25 800	38 570	1 020 000	1 232	559	1 407	638
5	Integral	3	5 1/8	5 1/2	112 900	1 382 000	6 5/8	3	NC 50	4 1/2 IF	34 520	52 430	1 278 200	1 535	696	1 732	786
5 1/2	Integral	3 5/8	5 11/16	6	1 478 140	1 316 100	7	3 5/8	5 1/2 FH		37 740	61 000	1 359 200	1 627	738	1 838	834
5 1/2	Integral	3 7/8	5 11/16	6	130 211	1 316 155	7 1/4	3 7/8	5 1/2 FH		36 000	52 817	1 182 515	1 509	684	1727	783
5 1/2	Integral	4	5 11/16	6	124 446	1 231 112	7 1/4	4	5 1/2 FH		33 412	48 552	1 089 740	1 429	648	1 640	744
6 5/8	Integral	4	6 15/16	7 1/8	261 840	2 409 570	8	4	6 5/8 FH		33 412	48 540	1 089 740	2 537	1151	2 795	1 268
6 5/8	Integral	4	6 15/16	7 1/8	261 840	2 409 570	8 1/4	4	6 5/8 FH		33 412	48 542	1 089 740	2 577	1169	2 836	1 286

© Jakarta Drilling Society 2025

HEAVY WEIGHT DRILL PIPE DATA

Nominal Size OD inches	Pipe Body Type	Pipe Body Tube ID inches	Pipe Body Elevator Upset Ø inches	Pipe Body Central Upset Ø inches	Pipe Body Torsional Strength ft-lbs	Pipe Body Tensile Strength lbs	Tool Joints OD inches	Tool Joints ID inches	Tool Joints Connections		Tool Joints Recommended Make-Up Torque ft-lbs	Tool Joints Torsional Strength ft-lbs	Tensile Strength lbs	Approx. Weight Standard lbs	Approx. Weight Standard Kg	Approx. Weight Spiral lbs	Approx. Weight Spiral Kg
									Preferred	Other							
3 1/2	Welded	2 1/16	3 7/8	4	19 600	345 400	4 3/4	2 1/16	NC 38	3 1/2 IF	11 500	19 170	852 740	785	356	915	415
3 1/2	Welded	2 1/16	3 7/8	4	19 600	345 400	5	2 1/16	NC 38	3 1/2 IF	16 700	26 700	852 740	810	367	941	427
3 1/2	Welded	2 1/4	3 7/8	4	18 500	310 000	4 3/4	2 1/4	NC 38	3 1/2 IF	11 500	19170	852 740	785	356	915	415
3 1/2	Welded	2 1/4	3 7/8	4	18 500	310 000	5	2 1/4	NC 38	3 1/2 IF	16 070	26 780	852 740	810	367	941	427
4	Welded	2 1/2	4 3/16	4 1/2	28 200	421 000	5 1/4	2 1/2	NC 40	4 FH	16 600	24 400	728 670	917	416	1 050	476
4 1/2	Welded	2 3/4	4 11/16	5	40 719	548 000	6 1/4	2 3/4	NC 46	4 IF	26 600	39 860	1 052 760	1 260	572	1 390	630
5	Welded	3	5 1/8	5 1/2	56 500	691 000	6 5/8	3	NC 50	4 1/2 IF	34 520	52 430	1 278 200	1 535	696	1 732	786
5 1/2	Welded	3 5/8	5 11/16	6	70 090	739 000	7	3 5/8	5 1/2 FH		37 740	61 000	1 359 200	1 627	738	1 838	834
5 1/2	Welded	3 7/8	5 11/16	6	65 100	658 000	7 1/4	3 7/8	5 1/2 FH		36 000	52 817	1 182 515	1 509	684	1727	783
5 1/2	Welded	4	5 11/16	6	62 200	615 000	7 1/4	4	5 1/2 FH		33 412	48 552	1 089 740	1 429	648	1 640	744
6 5/8	Welded	4	6 15/16	7 1/8	130 900	1 204 700	8	4	6 5/8 FH		33 412	48 540	1 089 740	2 537	1151	2 795	1268
6 5/8	Welded	4	6 15/16	7 1/8	261 840	2 409 570	8 1/4	4	6 5/8 FH		33 412	48 542	1 089 740	2577	1169	2 836	1286

© Jakarta Drilling Society 2025

Drilling String & Bottom Hole Assembly

QUAIL TOOLS

Heavy Weight Specification & Performance Data Sheet

5", 50.38#, Conventional, R2

NC50 (4-1/2"IF) - 6.625" x 3.000"

QT Item #: 637

Tube / Pipe Body Specification		
Type:	Conventional[1]	
OD:	5.000	in
ID:	3.000	in
Wall Thickness:	1.000	in
SMYS:	55,000	psi
Range:	R2	
Maximum Upset OD:	5.125	in

Tubular Assembly		
Adjusted Weight:	50.38	lbs/ft
Length (Approximate):	31	ft
Drift Size:	2.750	in
Number of Wearpads:	1	
Box TJ Length (nominal):	24 - 27	in
Pin TJ Length (nominal):	24 - 27	in
Fluid Displacement:	0.0183	bbls/ft
Fluid Capacity:	0.0087	bbls/ft

An oilfield barrel equals 42 US gallons.

Tube / Pipe Body Performance		
Tensile Strength:	691,150	lbs
Torsional Strength:	56,500	ft-lbs
Burst Capacity:	19,250	psi
Collapse Capacity:	17,600	psi

Notes:
-Dimensions, wall thickness, and tool joint lengths shown above are nominal if not otherwise stated.
-Values shown may vary with actual values due to OEM tolerances, rounding, and other factors.
-Figures may exclude the effects of wear, stress relief, bore back, ID chamfers, and/or spiral features.
[1]Conventional type heavy weight can also be referred to as "Standard" type.

Notes:
-Tube Tensile, Torsional, & Collapse are calculated at Nominal Wall Thickness
-Nominal burst calculated at 87.5% RBW per API

Connection / Tool Joint Specification		
Connection:	**NC50 (4-1/2"IF)**	
OD:	6.625	in
ID:	3.000	in
ID Chamfer:	N/A	in
SMYS:	120	ksi
Elevator Taper:	18°	

Connection Performance			
Thread Compound Friction Factor (FF):	**1.0 FF**	**1.15 FF**	
Maximum Make-Up Torque: (Recommended)	**34,500**	**39,675**	ft-lbs
Tension at Maximum Make-Up Torque:	1,177,400	1,177,400	lbs
Minimum MUT:	**28,800**	**33,120**	ft-lbs
Tension at Minimum Make-Up Torque:	1,330,000	1,330,000	lbs
Torsional Strength:	**57,500**	**66,125**	ft-lbs

Notes:
-Above dimensions are nominal.
-The following are registered trademarks of NOV-Grant Prideco™:
-There is no published pressure rating for this connection.

The Maximum Make-Up Torque based on the appropriate thread compound friction factor (FF) is recommended. MUTs lower than maximum should only be applied when MUT is limited by rig equipment or connection tensile capacity. MUT values lower than Minimum MUT should never be used.

Adjust MUT values per the applied thread compound's FF greater than 1.0, without exceeding 1.15. Above values tabulated at 1.0 and 1.15 FF.

JDS Jakarta Drilling Society

© Jakarta Drilling Society 2025

Drilling String & Bottom Hole Assembly

Drill Collar Specifications

O.D.	Connection Size & Type	I.D.		Wall Thickness	Wt. P/ft	Wt. Each	Slip Rec. Dia.	Yield Strength		Recommended Minimum Make-Up Torque	B.S.R.	Fluid	
		Bore +1/16"-0"	Drift					Tensile	Torsional			Displacement	Capacity
in.		in.		in.	lbs	lbs	in.	lbs	ft/lbs	ft/lbs		gal/p/ft	
3 1/8	2 7/8 HTPAC	1 1/2	1 3/8	0.8125	20.00	620	N/A	250,300	7,800	4,290	2.443	0.307	0.092
3 3/8	HT26	1 1/2	1 3/8	0.9375	24.50	760	N/A	357,700	9,300	5,115	2.024	0.373	0.092
3 1/2	NC 26	1 1/2	1 3/8	1.0000	27.00	837	N/A	357,700	8,100	4,606	2.42	0.408	0.092
4 1/8	NC 31	2	1 7/8	1.0625	35.00	1,085	3 3/4	454,400	12,100	6,853	2.44	0.531	0.163
	HT-31	2	1 7/8	1.0625	35.00	1,085	3 3/4	454,400	17,300	9,515	2.343	0.531	0.163
4 7/8	NC 38	2 1/4	2 1/8	1.3125	44.00	1,364	4 3/8	725,000	21,000	9,986	2.14	0.763	0.207
	HT-38	2 1/4	2 1/8	1.3125	44.00	1,364	4 3/8	725,000	31,300	17,215	2.024	0.763	0.207
	XT39	2 1/4	2 1/8	1.3125	44.00	1,364	4 3/8	798,800	37,300	20,515	1.455	0.763	0.207
6 1/4	NC 46	2 13/16	2 11/16	1.7188	83.00	2,573	5 3/4	1,055,000	39,500	22,426	2.64	1.271	0.323
6 1/2	NC 46	2 13/16	2 11/16	1.8438	91.00	2,821	6	1,055,000	39,500	22,426	3.07	1.401	0.323
	NC 50	2 13/16	2 11/16	1.8438	91.00	2,821	6	1,392,100	52,200	29,679	2.03	1.401	0.323
7	NC 50	2 13/16	2 11/16	2.0938	110.00	3,410	6 1/2	1,265,600	51,500	32,277	2.73	1.676	0.323
7 1/4	5 1/2 API REG	2 13/16	2 11/16	2.2188	119.00	3,689	6 3/4	1,396,300	58,200	36,235	2.87	1.822	0.323
7 3/4	NC 56	2 13/16	2 11/16	2.4688	139.00	4,309	7 1/4	1,734,200	77,000	48,221	2.7	2.128	0.323
8	6 5/8 API REG	2 13/16	2 11/16	2.5938	150.00	4,650	7 1/2	1,734,200	77,200	53,346	2.6	2.288	0.323
9 1/2	7 5/8 API REG LOW TORQUE	3	2 7/8	3.2500	212.00	6,572	9	2,661,800	138,300	86,463	2.87	3.315	0.367

1. Materials Mechanical Properties - 3 1/8" thru 6 7/8" 110,000psi Min. Yield Strength, 140,000psi Min. Tensile Strength; 7" thru 11" 100,000psi Min. Yield Strength, 135,000psi Min. Tensile Strength; Min. Hardness (BHN) 285.
2. Make-Up Torque figures indicated in bold print indicate that the weaker member is the BOX connection.
3. For those cases, where down-hole drilling torque is causing connection movement downhole, increase make-up torque by ten (10%) percent.
4. Recommended make-up torque assumes the use of a thread compound containing 40 to 60% by weight of finely powdered metallic zinc, applied thoroughly to all threads and shoulders.
5. NOTE: Monitor break-out torque - it should be less than or no greater than make-up torque. If greater, the connection should be cleaned, inspected and repaired before it is made up again.

© Jakarta Drilling Society 2025

Drilling String & Bottom Hole Assembly

© Jakarta Drilling Society 2025

Drilling String & Bottom Hole Assembly

QUAIL TOOLS

Drill Collar Specification & Performance Data Sheet

6-1/2", Spiral

NC50 (4-1/2"IF) - 6.500" x 2.813"

QT Item#: 7688

Drill Collar Specification		
Type:	Spiral	
OD:	6.500	in
ID:	2.813	in
Wall Thickness:	1.844	in
SMYS:	110	ksi
Slip Recess OD:	6.000	in

Drill Collar Assembly		
Adjusted Weight:	92.00	lbs/ft
Length (Approximate):	31	ft
Drift:	2.688	in
Fluid Displacement:	0.0334	bbls/ft
Fluid Capacity:	0.0077	bbls/ft

An oilfield barrel equals 42 US gallons.

Drill Collar Properties		
Cross Section of Body:	26.968	in^2
Cross Section of OD:	33.183	in^2
Cross Section of ID:	6.215	in^2
Section Modulus:	26.016	in^3
Polar Section Modulus:	52.031	in^3
Moment of Inertia: (Drill Collar Body)	84.550	in^4
Polar Moment of Inertia:	169.101	in^4

Notes:
-Dimensions, wall thickness, and lengths shown above are nominal if not otherwise stated.
-Values shown may vary with actual values due to OEM tolerances, rounding, and other factors.
-Capacity, Displacement, & Adjusted Weight are best estimates from the OEM.
-Figures may exclude the effects of wear, stress relief, bore back, ID chamfers, and/or spiral features.

Connection Specification		
Connection:	NC50 (4-1/2"IF)	
OD:	6.500	in
ID:	2.813	in
BSR:	2.025	
Box Bore Back:	YES	
Pin Stress Relief:	YES	

Connection Performance			
Thread Compound Friction Factor (FF):	**1.0 FF**	**1.15 FF**	
Max Make-Up Torque:	32,800	37,720	ft-lbs
Tension at Standard Make-Up Torque:	1,113,900	1,113,900	lbs
Minimum Make-Up Torque: (Recommended)	29,800	34,270	ft-lbs
Tension at Minimum Make-Up Torque:	1,254,400	1,254,400	lbs
Torsional Strength:	52,500	60,375	ft-lbs

Notes:
-Above dimensions are nominal.
-The following are registered trademarks of NOV-Grant Prideco™:
-There is no published pressure rating for this connection.
-Lift subs required with these drill collars.

The Minimum Make-Up Torque based on the appropriate thread compound friction factor (FF) is recommended per API. MUTs lower than the Minimum MUT should never be used.

Per API: Normal torque range is tabulated (minimum) value plus 10 percent. Higher torque values may be used under extreme conditions and is recommended particularly when downhole torque and/or backoff is a concern.

Adjust MUT values per the applied thread compound's FF greater than 1.0, without exceeding 1.15. Above values tabulated at 1.0 and 1.15 FF.

JDS Jakarta Drilling Society

© Jakarta Drilling Society 2025

Drilling String & Bottom Hole Assembly

Schematic drawings

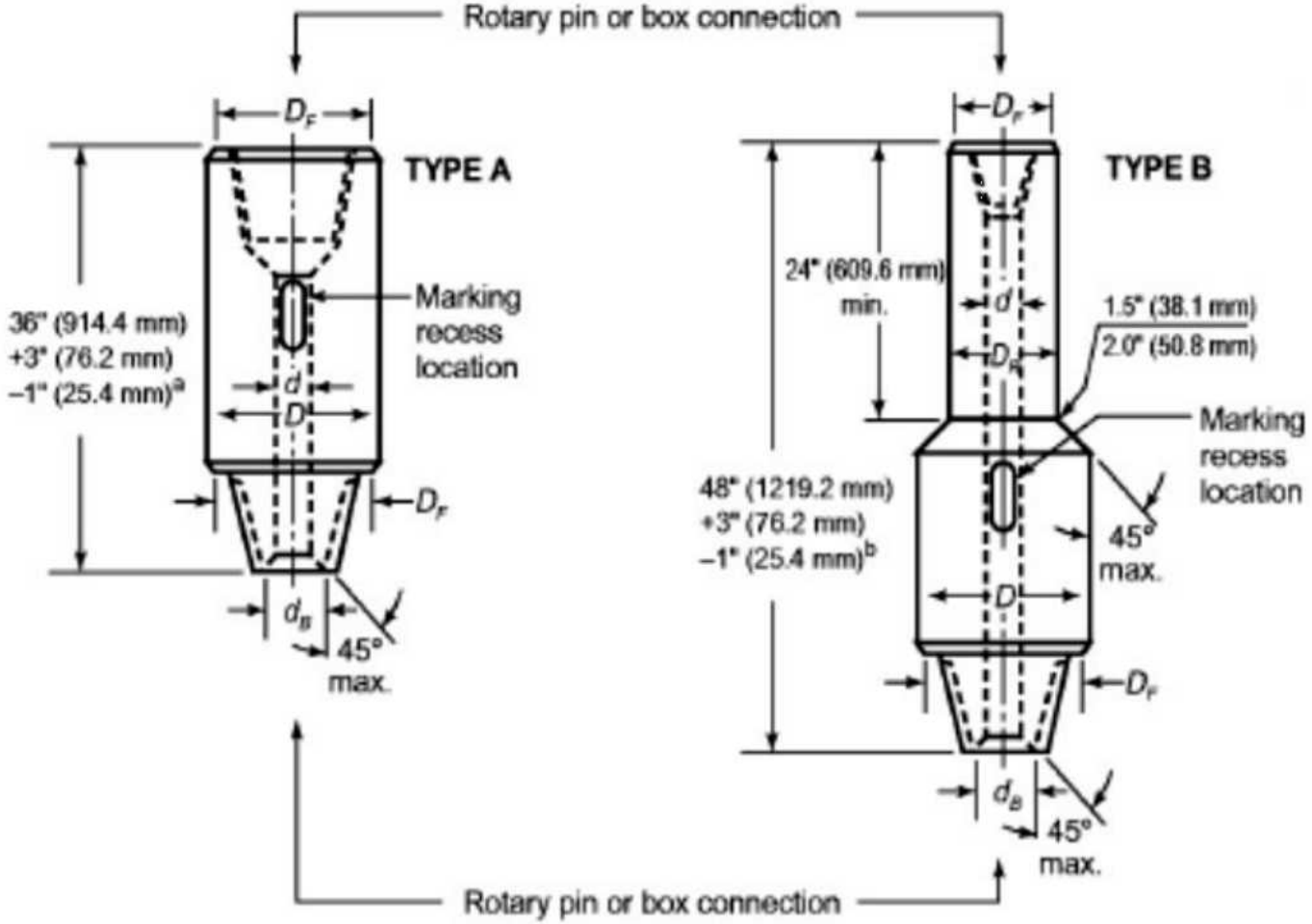

Note: See Table 9.

[a]If type A is a double box or double pin sub, the overall length is 36" (914.4 mm).

[b]If type B is a double box or double pin sub, the overall length is 48" (1219.2 mm).

Drilling String & Bottom Hole Assembly

© Jakarta Drilling Society 2025

Drilling System & Rig Components

Tubular Handling Tools

© Jakarta Drilling Society 2025

Jakarta Drilling Society

Tubular Handling Tools

- Manual Tongs
- Link & Elevator
- Slips
- Power Tongs

Jakarta Drilling Society
© Jakarta Drilling Society 2025

Tubular Handling Tools

These are the most common

- BJ Type SXD-200 Tong
- BJ Type SDD Tong
- BJ Type DB Tong
- BJ Type B Tong
- BJ Extended Type "B" Casing Tong Head
- BJ Type C Tong

VARCO BJ Tongs - Manual

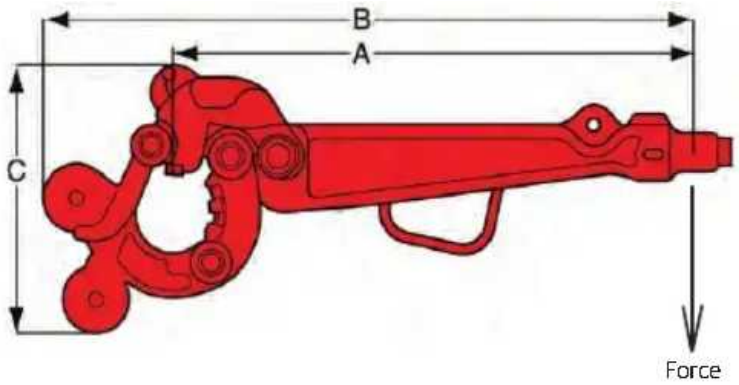

DIMENSIONS

HT tong type	Size lever [inch]	Size lever [mm]	Type	A max. [inch-mm]	A min. [inch-mm]	B max. [inch-mm]	B min. [inch-mm]	C [inch-mm]
14	2.3/8 - 7	60 - 178	Standard	27 - 685	24.3/4-628	33-838	30.3/4-781	14-355
35	2.3/8 - 10.3/4	60 - 273	Long lever	47.1/8 - 1,196	44.5/8-1,133	57.1/8-1,450	54.5/8-1,387	18-457
			Short lever	36.3/16 - 919	33.11/16 -885	46.11/16-1,173	43.11/16-1,109	18-457
55	3.1/2 - 13.3/8	89 - 340	Long lever	55.3/16 - 1,401	52.1/16-1,322	66.7/16-1,687	59.9/16-1,512	23.1/4-590
			Short lever	49.3/16 - 1,249	46.1/16-1,169	60.7/16-1,535	53.9/16-1,360	23.1/4-590
65	3.1/2 - 17	89 - 432	Standard	59.9/16 - 1,436	50.15/16 -1,293	72.9/16-1,843	72.9/16-1,519	35.3/4-908
100	4 - 17	102 - 432	Standard	60 - 1,524	53.7/8 -1,368	78-1,981	78-1,641	34.1/8-866
	7.1/2 - 12	191 - 305	Standard	62.1/2 - 1,597	60-1,524	80-2,032	76.3/8-1,940	31.3/4-806
200	6 - 16	152 - 406	Standard	62.3/8 - 1,584	57.11/16-1,465	78-1,981	68-1,727	38-965

CASING HEAD ASSEMBLY ONLY

HT tong type	Size lever [inch]	Size lever [mm]	
HT50	13.3/8-36	340 - 914	Lever to be used with HT55 tong and hanger

© Jakarta Drilling Society 2025

Tubular Handling Tools

MAIN PART NUMBERS AND SIZE EQUIPMENT TONGS

Part Description [inches]	Part number	Oracle number	Torque Rating [ft.lbs]	[Nm]	Weight [lbs]	[kg]
HT55						
Complete with long lever, less lug jaws	200560	10022875-001	-	-	400	181
Complete with short lever, less lug jaws	200560-1	10449507-001	-	-	386	175
Lug jaw assembly 3.1/2 - 5	200083-1	10022188-001	35,000	47,453	29	13
Lug jaw assembly 5 - 6.3/4	200084-1	10022189-001	55,000	74,570	39	17.7
Lug jaw assembly 6.5/8 - 9	200085-1	10022190-001	55,000	74,570	56	25.4
Lug jaw assembly 9 - 10.3/4	200086-1	10022195-001	40,000	54,232	60	27.2
Lug jaw assembly 11.3/4	200087-1	10022196-001	30,000	40,674	61	27.7
Lug jaw assembly 12	200088-1	10359156-001	30,000	40,674	65	29.5
Lug jaw assembly 12.3/4 - 13	200089-1	10022202-001	30,000	40,674	72	32.7
Lug jaw assembly 13.3/8	200090-1	10022204-001	30,000	40,674	72	32.7

Jakarta Drilling Society
© Jakarta Drilling Society 2025

Tubular Handling Tools

© Jakarta Drilling Society 2025

Tubular Handling Tools

Breaking Connection

© Jakarta Drilling Society 2025

Tubular Handling Tools

- Varco G series Elevator

Varco BJ Type GG Elevator

BJ Type GG elevator

Varco BJ Type MGG Elevator

BJ Type MGG elevator in open position.

Varco BJ Type MG Elevator

BJ Type MG elevator

Varco BJ Type RG Elevator

BJ Type RG elevator

RATED CAPACITIES—G SERIES ELEVATORS

Size (O.D.)		GG		MGG		RG		MG	
in.	mm	tons	tonne	tons	tonne	tons	tonne	tons	tonne
2⅜	60.33	. . .	. . .	. . .	. . .	150	136.08	100	90.72
2⅞	73.03	. . .	. . .	. . .	. . .	150	136.08	100	90.72
3½ (FH & IF)	88.9	. . .	. . .	250	226.8	150	136.08	100	90.72
4	101.6	350	317.52	250	226.8	175	158.76	100	90.72
4½ (Reg. & FH)	114.3	350	317.52	250	226.8	175	158.76	100	90.72
5, 4½ (IF)	127, 114.3	350	317.52	250	226.8	200	181.44	100	90.72
5½	139.70	350	317.52	250	226.8	200	181.44	. . .	. . .

© Jakarta Drilling Society 2025

Tubular Handling Tools

SD-Type Elevator

SD-Side Door Elevator, 18-Degree Type

Type	P/N	r.c.	Size O.D.
SD-350	633 500	350 tons	4" - 51/2"

SDS-Side Door Elevator, 90-Degree Type

Type	P/N	r.c.	Size O.D.
SDS- 65/1	640 600	65 tons	1,660" - 2.7/8"
SDS-100/1	641 020	100 tons	2.3/8" - 4.1/8"
SDS-100/2	641 000	100 tons	4" - 6.3/4"
SDS-100/3	641 040	100 tons	6.3/4" - 9.5/8"
SDS-150/1	641 500	150 tons	4" - 6.3/4"
SDS-150/2	641 520	150 tons	6.3/4" - 9.5/8"
SDS-150/3	641 540	150 tons	10" - 12.3/4"
SDS-150/4	641 560	150 tons	13" - 16"
SDS-150/5	641 580	150 tons	16.3/4" - 21.1/2"
SDS-150/7	641 620	150 tons	24" - 30"
SDS-250/0	642 600	250 tons	6.1/2" - 9.5/8"
SDS-250/1	642 500	250 tons	9.5/8" - 13.3/8"
SDS-250/2	642 520	250 tons	13.17/32" - 18.25/32"
SDS-250/3	642 540	250 tons	18.5/8" - 21.1/2"
SDS-250/5	642 580	250 tons	24" - 30"
SDS-350/1	643 500	350 tons	6.5/8" - 9.5/8"
SDS-350/2	643 520	350 tons	10.3/4" - 16.3/4"
SDS-350/4	643 560	350 tons	18.5/8" - 21.1/2"
SDS-350/5	643 580	350 tons	24" - 30"

SDS-Type Elevator

© Jakarta Drilling Society 2025

Tubular Handling Tools

SIDE DOOR ELEVATOR

CENTER LATCH ELEVATOR

SINGLE JOINT ELEVATOR

© Jakarta Drilling Society 2025

Tubular Handling Tools

SDML - Medium Rotary Slips

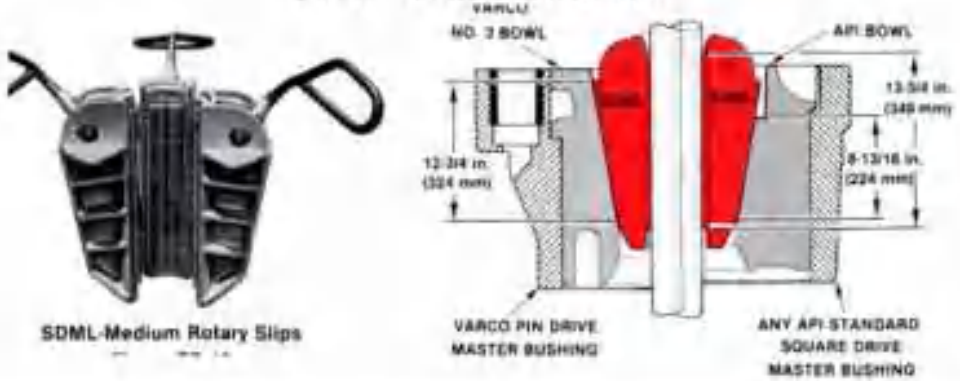

Slip Body Size (inches)	3-1/2			4-1/2		
API Pipe Size (OD, inches)	2-3/8	2-7/8	3-1/2	3-1/2	4	4-1/2
Part No.: Slip complete w/inserts	15524	15523	15522	15563	15564	15565
Weight: Slip complete w/inserts lb (kg)	193 (87,5)	188 (85,3)	180 (81,6)	207 (94)	199 (90,3)	188 (85,3)
INSERTS Set: Part No.	2160-30	2161-30	2162-30	2163-45	2164-45	2165-45
Weight lb (kg)	26 (11,8)	21 (9,5)	13 (5,9)	39 (17,7)	31 (14,1)	20 (9)
Slip Body Size (inches)	**5**			**5-1/2**		
API Pipe Size (OD, inches)	**4**	**4-1/2**	**5**	**4-1/2**	**5**	**5-1/2**
Part No.: Slip complete w/inserts	15567	15568	15569	15571	15572	15573
Weight: Slip complete w/inserts lb (kg)	204 (92,5)	196 (88,9)	185 (84)	200 (90,9)	185 (84)	181 (82,1)
INSERTS Set: Part No.	2168-45	2166-45	2167-45	2168-45	2169-45	2170-45
Weight lb (kg)	39 (17,7)	31 (14,1)	20 (9)	39 (17,7)	31 (14,1)	20 (9)

SDXL - Extra Long Rotary Slips

Slip Body Size (inches)	3-1/2			4-1/2		
API Pipe Size (OD, inches)	2-3/4	2-7/8	3-1/2	3-1/2	4	4-1/2
Part No.: Slip complete w/inserts	—	—	—	15515	15514	15513
Weight: Slip complete w/inserts lb (kg)	—	—	—	229 (103,9)	219 (99,3)	205 (93)
INSERTS Set: Part No.	2160-36	2161-36	2162-36	2163-54	2164-54	2165-54
Weight lb (kg)	32 (14,5)	25 (11,3)	16 (7,3)	47 (21,3)	37 (16,8)	23 (10,4)
Slip Body Size (inches)	**5**			**5-1/2**		
API Pipe Size (OD, inches)	**4**	**4-1/2**	**5**	**4-1/2**	**5**	**5-1/2**
Part No.: Slip complete w/inserts	15518	15517	15516	15521	15520	15519
Weight: Slip complete w/inserts lb (kg)	237 (107,5)	227 (103)	213 (96,6)	234 (106,1)	224 (101,5)	210 (95,3)
INSERTS Set: Part No.	2168-54	2166-54	2167-54	2168-54	2169-54	2170-54
Weight lb (kg)	47 (21,3)	37 (16,8)	23 (10,4)	47 (21,3)	37 (16,8)	23 (10,4)

© Jakarta Drilling Society 2025

Tubular Handling Tools

DCS - Multi Segment Drill Collar Slips

DCS-Multi-Segment Drill Collar Slips

DCS - Data Dimensions

Slips	Slip Size Drill Collar Range (inches)	Circular Buttons			
		Part No.	Weight		Qty Per Set
			lb	kg	
DCS-S	3 - 4	2628-49	12	5,4	49
	4 - 4	2620-49	6	2,7	49
DCS-R	4-1/2 - 6	2628-63	16	7,3	63
	5-1/2 - 7	2620-63	8	3,6	63
DCS-L	6-3/4 - 8-1/4	2630-88	11	5	88
	8 - 9-1/2	2630-96	12	5,4	96
	8-1/2 - 10	2627-104	26	11,8	104
	9-1/4 - 11-1/4	2630-112	14	6,3	112
	11 - 12-3/4	2625-136	36	16,3	136
	12 - 14	2630-136	17	7,7	136

DCS - Drill Collar Slips Grip Length

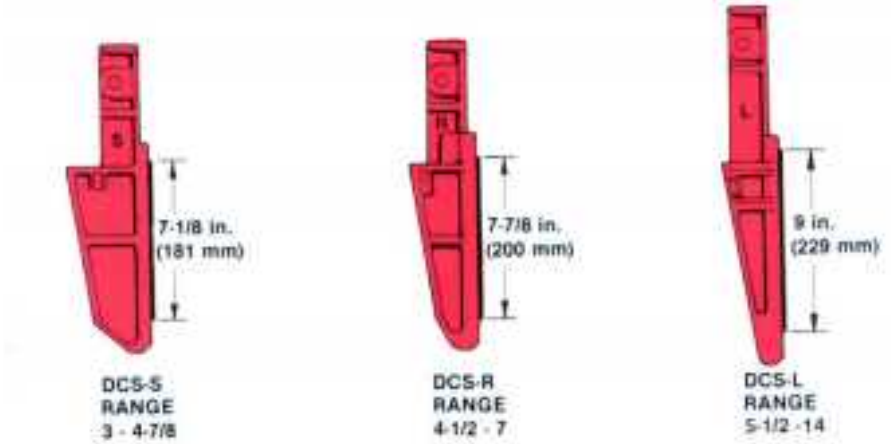

© Jakarta Drilling Society 2025

Tubular Handling Tools

CMS-XL Casing Slips Grip Length

Description	Casing Size (OD, inches)						
	6-5/8	7	7-5/8	8-5/8	9-5/8*	10-3/4*	11-3/4*
Part No. Slip complete w/Circular Buttons	5315	5301	5303	5305	5307	5309	5311
Weight, complete w/Circular Buttons, lb(kg)	196 (88,9)	184 (83,5)	166 (75,3)	181 (82,1)	192 (87,1)	209 (94,8)	260 (117,9)
Total number of Segments	12	12	12	13	14	15	17
Total number of Intermediate Segments	10	10	10	11	12	13	15
Total number of Hinge Pins	11	11	11	12	13	14	16

Description	Casing Size (OD, inches)						
	13-3/8*	16*	18-5/8*	20*	24*	26*	30*
Part No. Slip complete w/Circular Buttons	5313	5325	5333	5329	5331	5346	5342
Weight, complete w/Circular Buttons, lb(kg)	247 (112)	308 (139,7)	367 (166,5)	383 (173,7)	443 (200,9)	486 (220,4)	546 (247,7)
Total number of Segments	18	21	25	26	30	33	37
Total number of Intermediate Segments	16	19	23	24	28	31	35
Total number of Hinge Pins	17	20	24	25	29	32	36

© Jakarta Drilling Society 2025

Tubular Handling Tools

Drill Pipe Slips

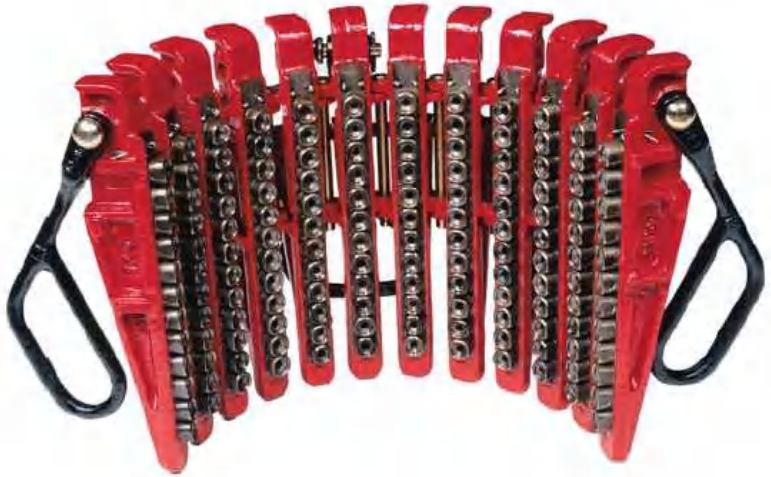

Drill Collar Slips

Casing Slips

© Jakarta Drilling Society 2025

Tubular Handling Tools

© Jakarta Drilling Society 2025

Tubular Handling Tools

Safety Clamp

Carrier with Grippin

Safety Clamp Data

Range (inches)	Quantity		Weight	
	Links	Gripping Dies	lb	kg
MP-S				
2-7/8 — 4-1/8	7	8	83	37,6
4 — 5	8	9	91	41,3
MP-R				
4-1/2 — 5-5/8	7	8	81	36,7
5-1/2 — 7	8	9	89	40,4
6-3/4 — 8-1/2	9	10	97	44
8 — 9-1/4	10	11	105	47,6
9-1/4 — 10-1/2	11	12	113	51,3
MP-M				
10-1/2 — 11-1/2	12	13	121	54,9
11-1/2 — 12-1/2	13	14	129	58,5
12-1/2 — 13-5/8	14	15	137	62,1
13-5/8 — 14-3/4	15	16	145	65,8
14-3/4 — 15-7/8	16	17	153	69,4
MP-L				
15-7/8 — 17	17	18	173	78,5
17 — 18-1/8	18	19	181	82,1
18-1/8 — 19-3/8	19	20	189	85,7
MP-XL				
19-3/8 — 20-3/8	19	20	196	88,9
20-3/8 — 21-1/2	20	21	204	92,5
21-1/2 — 22-5/8	21	22	212	96,2
22-5/8 — 23-3/4	22	23	220	99,8
23-3/4 — 24-7/8	23	24	228	103,4
24-7/8 — 26	24	25	236	107
26 — 27-1/8	25	26	244	110,7
29-3/8 — 30-1/2	28	29	336	152,4

© Jakarta Drilling Society 2025

Tubular Handling Tools

Safety Clamp

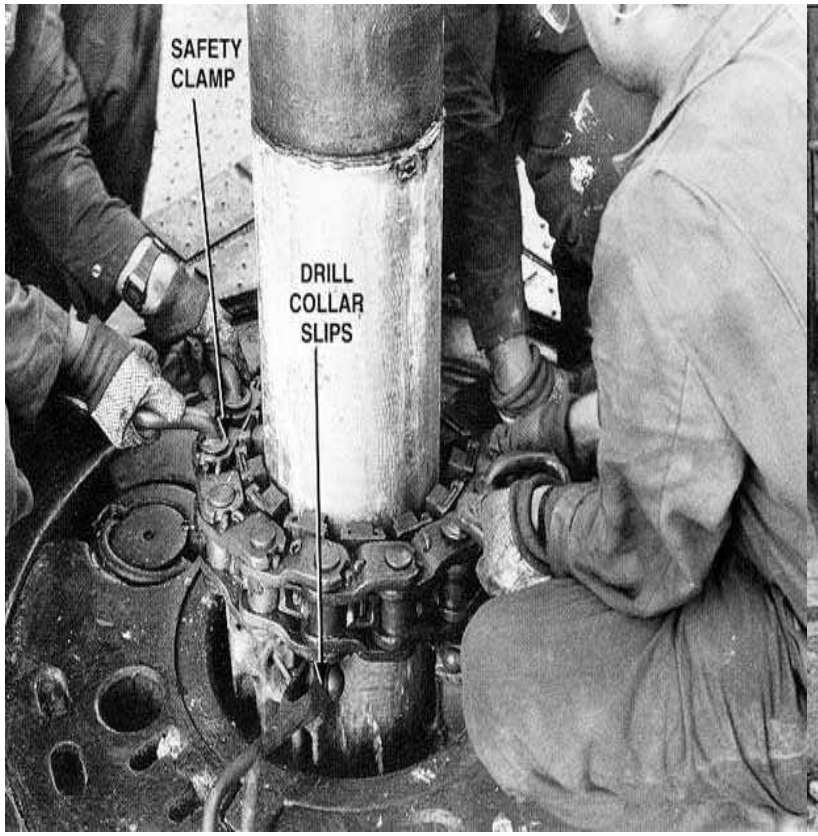

© Jakarta Drilling Society 2025

Tubular Handling Tools

VARCO SSW30 *Spinning wrench*

VARCO SSW30 – Specifications

Specifications

Size Range.....2-7/8 - 9-1/2 inch (73-241 mm) OD
Normal Operating Pressure.....2000 psi (138 atm)
Torque (5-inch dia pipe).....900 to 1000 ft-lbs (1215-1350 N·m)
Speed (5-inch dia pipe).....100 rpm
Weight.....850 lbs (385 kg)
Hyd Power Reqmt.....29 to 45 GPM (110-170 l/min)

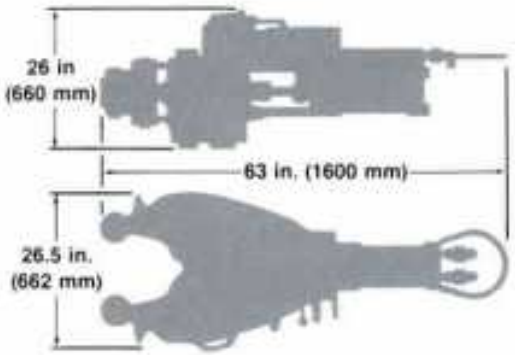

- DP torque Wrench

Making up and breaking out made simple.

The hydraulically powered TW-60 makes up and breaks out drill pipe tool joints and drill collars from 4 to 8 inch OD.

Torque is adjustable and can be pre-set to the required value

Example of DP Combined Spinning & Torque Wrench

© Jakarta Drilling Society 2025

Tubular Handling Tools

IRON ROUGHNECK

© Jakarta Drilling Society 2025

Tubular Handling Tools

Spinning & DP torque Wrench combination

Examples of POWER TONGS

Hydraulic Power Tong Selection Chart

Model	Size Ranges	Torque
14-50	6 5/8" – 14"	50,000 ft-lbs
16-18	2 3/8" – 16"	18,000 ft-lbs
16-25	2 3/8" – 16"	25,000 ft-lbs
24-50	5 1/2" – 24"	50,000 ft-lbs

Model 14.5-50 High Torque Casing Tong

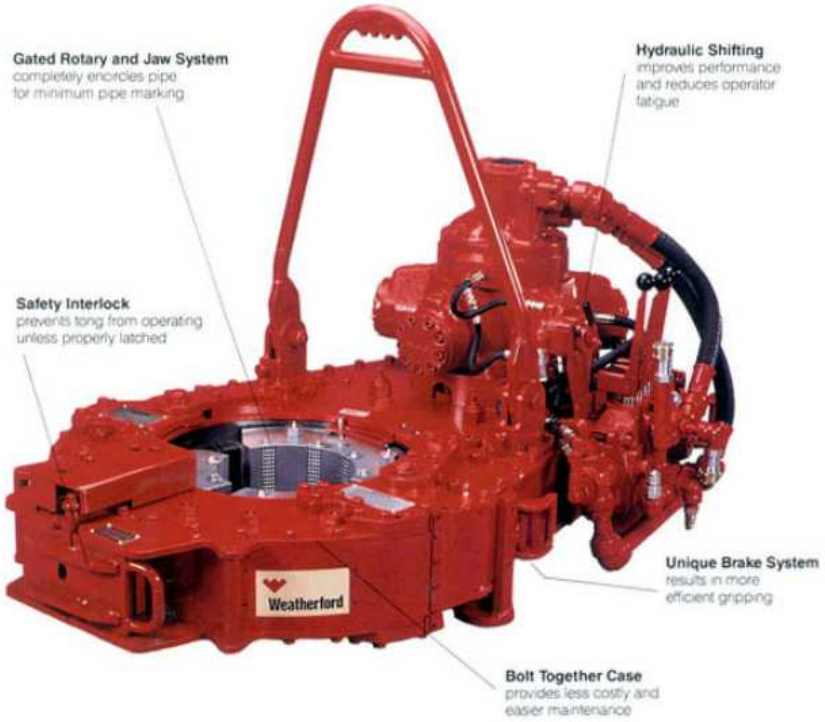

© Jakarta Drilling Society 2025

Tubular Handling Tools

5½ Hydra-Shift® LS

Tubing Tong 1.050 - 5½ in.

Compact Side and Big Torque!

© Jakarta Drilling Society 2025

Rig Inspections & Maintenance

© Jakarta Drilling Society 2025

Jakarta Drilling Society

Drilling Rig Inspection Categories

To detect service defects and possible hidden manufacturing defects

- Category I

  This category involves observing the equipment during operation for indications of inadequate performance.

- Category II

  This is Category I inspection plus further inspection for corrosion, deformation, loose or missing components, deterioration, proper lubrication, visible external cracks, and adjustment.

- Category III

  This is Category II inspection plus further inspection, which should include NDT of critical areas and may involve some disassembly.

- Category IV

  This is Category III inspection plus further inspection for which the equipment is disassembled to the extent necessary to conduct NDT of all primary-load-carrying components as defined by manufacturer

Jakarta Drilling Society
© Jakarta Drilling Society 2025

Drilling Rig Inspection Recommendation / Findings

- Critical Recommendations

  Recommendation based on shortcomings, which may lead to loss of life, serious injury or environmental damage as a result inadequate use / equipment failures.

- Major Recommendations

  Recommendation based on shortcomings, which may lead to damage to essensial equipment or have a detrimental effect on the drilling operation demage as a result inadequate use / equipment failures.

- Minor Recommendations

  Recommendation based on shortcomings, which may lead to a situation that contributes to incidents or to circumstances in which the required standards of operation are not met.

Jakarta Drilling Society

© Jakarta Drilling Society 2025

Inspection Recommendation Sample

	Tuggers and Sheaves:
Critical	Upon completion of installation, carry out a load test.
Major	Have all the winches clearly marked with the SWL.
	Survey Line:
Minor	Clean the rust from all shafts and components. Liberally coat them with either grease or oil.
Minor	Review the brake linkages and make the necessary improvements to the brake band anchors.
Minor	Have the weight indicator either replaced or repaired and calibrated.
Minor	The survey line must be fully tested prior to entering service.

© Jakarta Drilling Society 2025

Drilling String Inspection

Common reference for drilling string inspection refers to DS-1 and API RP7G-2

Drill Pipe Inspection
Tube Body
Visual Tube
OD Gauging
UT Wall Thickness checks
Electromagnetic Scanning
MPI/Slip Area
UT Slip Area
Tool Joint
Visual connection
Fluorescent MPI of connection
Thread profiling w/gauge
OD/ID Gauging
Seal width/Condition
Shoulder width
Bevel Diameter
Seal Flatness
Counter-bore depth
Counter-bore Diameter
Pin stretch
Box Swell
Tong Space

Well Depth (feet)	Minumum Service Category	Mud Weight (ppg)	Minimum Service Category
< 5,000	2	< 9.0	2
5,000 - 10,000	3	9.1 - 11.0	3
10.000 - 16,000	4	11.1 - 14.5	4
> 16,000	5	> 14.5	5

Reference:

For Drill pipes 1,500 - 2500 rotating hours

For Bottom Hole Assembly 250 - 500 rotating hours

© Jakarta Drilling Society 2025

Drilling String Inspection Report

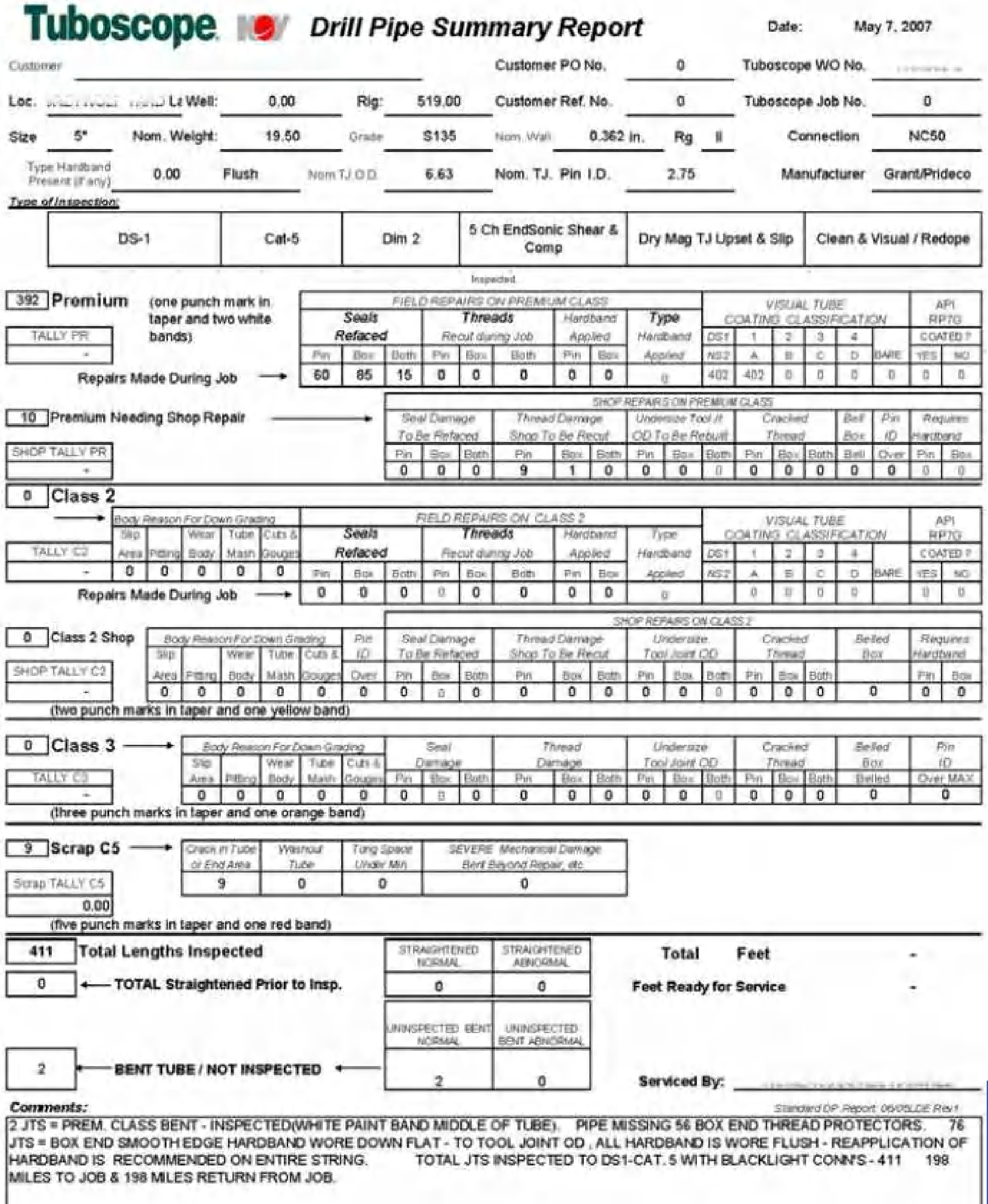

Tuboscope NOV — Drill Pipe Summary Report

Date: May 7, 2007

Customer		Customer PO No.	0	Tuboscope WO No.	
Loc.	Well: 0.00	Rig: 519.00	Customer Ref. No. 0	Tuboscope Job No.	0
Size 5"	Nom. Weight: 19.50	Grade S135	Nom. Wall 0.362 in.	Rg II	Connection NC50
Type Hardband Present (if any) 0.00	Flush	Nom TJ O.D. 6.63	Nom. TJ. Pin I.D. 2.75		Manufacturer Grant/Prideco

Type of Inspection:

DS-1	Cat-5	Dim 2	5 Ch EndSonic Shear & Comp	Dry Mag TJ Upset & Slip	Clean & Visual / Redope

Inspected

392 Premium (one punch mark in taper and two white bands)

TALLY PR: -

Repairs Made During Job →

FIELD REPAIRS ON PREMIUM CLASS

Seals Refaced Pin	Box	Both	Threads Recut during Job Pin	Box	Both	Hardband Applied Pin	Box	Type Hardband Applied	Visual Tube Coating DS1 1 / NS2 A	2 / B	3 / C	4 / D	BARE	API RP7G Coated? YES	NO
60	85	15	0	0	0	0	0	0	402 / 402	0	0	0	0	0	0

10 Premium Needing Shop Repair →

SHOP TALLY PR: -

SHOP REPAIRS ON PREMIUM CLASS

Seal Damage To Be Refaced Pin	Box	Both	Thread Damage Shop To Be Recut Pin	Box	Both	Undersize Tool Jt OD To Be Rebuilt Pin	Box	Both	Cracked Thread Pin	Box	Both	Bell Box Bell	Pin ID Over	Requires Hardband Pin	Box
0	0	0	9	1	0	0	0	0	0	0	0	0	0	0	0

0 Class 2

TALLY C2: -

Body Reason For Down Grading: Slip Area	Pitting	Wear Body	Tube Mash	Cuts & Gouges
0	0	0	0	0

Repairs Made During Job →

FIELD REPAIRS ON CLASS 2

Seals Refaced Pin	Box	Both	Threads Recut during Job Pin	Box	Both	Hardband Applied Pin	Box	Type Hardband Applied	Visual Tube Coating DS1 1 / NS2 A	2 / B	3 / C	4 / D	BARE	API RP7G Coated? YES	NO
0	0	0	0	0	0	0	0	0	0	0	0	0		0	0

0 Class 2 Shop

SHOP TALLY C2: -

SHOP REPAIRS ON CLASS 2

Slip Area	Pitting	Wear Body	Tube Mash	Cuts & Gouges	Pin ID Over	Seal Damage To Be Refaced Pin	Box	Both	Thread Damage Shop To Be Recut Pin	Box	Both	Undersize Tool Joint OD Pin	Box	Both	Cracked Thread Pin	Box	Both	Belled Box	Requires Hardband Pin	Box
0	0	0	0	0	0	0	0	0	0	0	0	0	0	0	0	0	0	0	0	0

(two punch marks in taper and one yellow band)

0 Class 3 →

TALLY C3: -

Slip Area	Pitting	Wear Body	Tube Mash	Cuts & Gouges	Seal Damage Pin	Box	Both	Thread Damage Pin	Box	Both	Undersize Tool Joint OD Pin	Box	Both	Cracked Thread Pin	Box	Both	Belled Box Belled	Pin ID Over MAX
0	0	0	0	0	0	0	0	0	0	0	0	0	0	0	0	0	0	0

(three punch marks in taper and one orange band)

9 Scrap C5 →

Scrap TALLY C5: 0.00

Crack in Tube or End Area	Washout Tube	Tong Space Under Min	SEVERE Mechanical Damage Bent Beyond Repair, etc.
9	0	0	0

(five punch marks in taper and one red band)

411 Total Lengths Inspected

0 ← TOTAL Straightened Prior to Insp.

STRAIGHTENED NORMAL	STRAIGHTENED ABNORMAL
0	0

Total Feet -

Feet Ready for Service -

2 ← BENT TUBE / NOT INSPECTED ←

UNINSPECTED BENT NORMAL	UNINSPECTED BENT ABNORMAL
2	0

Serviced By:

Standard DP Report 06/05LDE Rev1

Comments:

2 JTS = PREM. CLASS BENT - INSPECTED(WHITE PAINT BAND MIDDLE OF TUBE). PIPE MISSING 56 BOX END THREAD PROTECTORS. 76 JTS = BOX END SMOOTH EDGE HARDBAND WORE DOWN FLAT - TO TOOL JOINT OD , ALL HARDBAND IS WORE FLUSH - REAPPLICATION OF HARDBAND IS RECOMMENDED ON ENTIRE STRING. TOTAL JTS INSPECTED TO DS1-CAT. 5 WITH BLACKLIGHT CONN'S - 411 198 MILES TO JOB & 198 MILES RETURN FROM JOB.

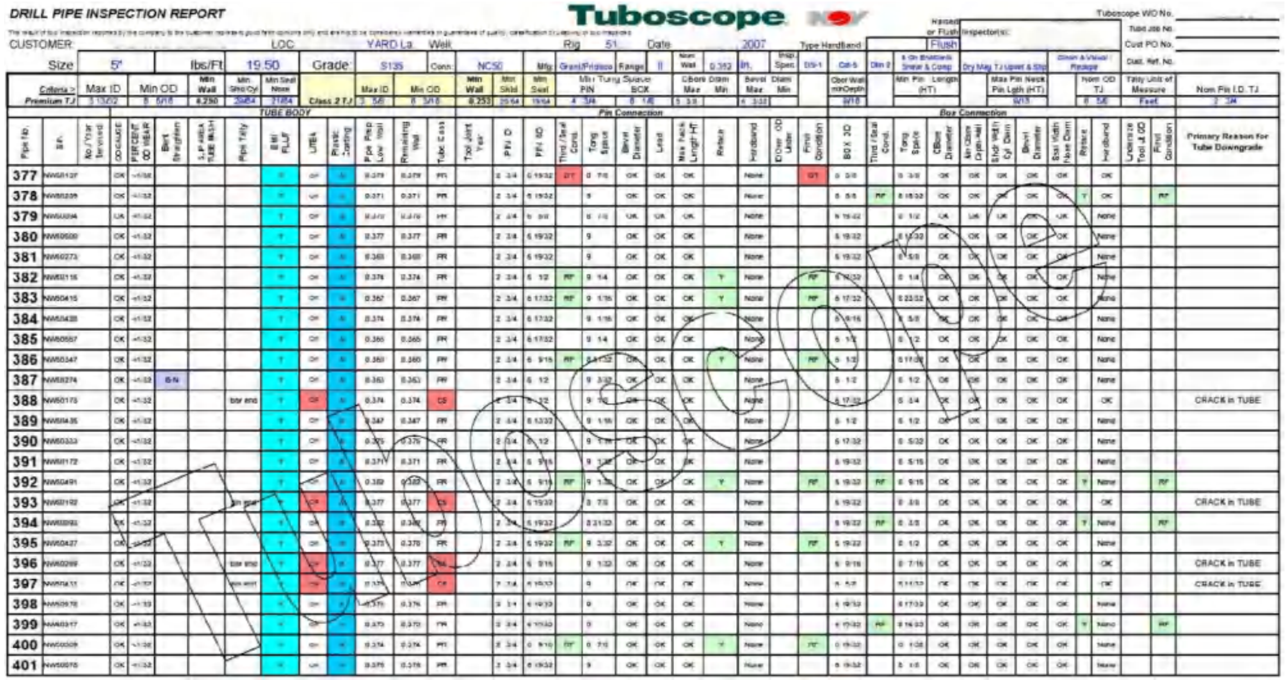

DRILL PIPE INSPECTION REPORT — Tuboscope NOV

CUSTOMER: LOC: YARD La Well Rig 51 Date 2007 Type HardBand Flush

Size 5" lbs/Ft 19.50 Grade S135 Conn NC50 Mfg Grant/Prideco Range II Nom Wall 0.362 in.

TUBE BODY — Pin Connection — Box Connection — Primary Reason for Tube Downgrade

Pipe No.	Primary Reason for Tube Downgrade
377	
378	
379	
380	
381	
382	
383	
384	
385	
386	
387	
388	CRACK in TUBE
389	
390	
391	
392	
393	CRACK in TUBE
394	
395	
396	CRACK in TUBE
397	CRACK in TUBE
398	
399	
400	
401	

Jakarta Drilling Society
© Jakarta Drilling Society 2025

Drilling String Failures

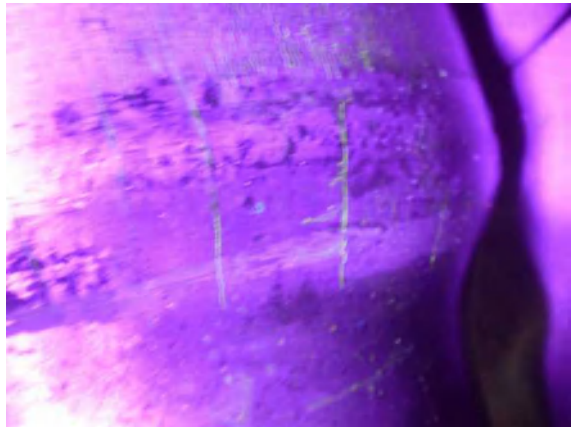

© Jakarta Drilling Society 2025

Well Control System

WEIR ENGINEERING SERVICES CO., DUBAI
API Q1 9th Ed., ISO 9001:2008, ISO 14001:2004 & OHSAS 18001: 2007 CERTIFIED COMPANY

QUALITY DOCUMENT

HYDRIL 29-1/2" 500 "MSP" DIVERTER

QTY: 01 Assy.

CUSTOMER :

WEIR JOB No. :

CUSTOMER PO :

COVER-01 REV-02 27 JULY 2015 WEIR ENGINEERING SERVICES Co., P.O. BOX 11419, DUBAI, U.A.E TEL: 00 971 4 8080000 FAX: 00971 4 8838595 Website : www.weiroilandgas.com

Authorized Service Provider

Dubai

Certificate of Conformance

Repaired Equipment

Certificate #	WEIR-GEEQUIP-
Customer Name:	
Rig Name:	N/A
Sales Order Number:	
Customer Purchase Order:	
Customer Asset No:	N/A
Description of Equipment:	HYDRIL 29-1/2" 500 "MSP" DIVERTER
Equipment Serial Number:	
Equipment Part Number:	
Date of Remanufacture/Repair:	
Equipment Pressure Rating:	500 PSI
Equipment Test Pressure:	750 PSI
Code(s), Standard(s) or Specification(s) Applied:	NACE MR0175
Industry Code(s), Standard(s) or Specification(s) Applied:	HYDRIL SPECIFICATION

Weir Engineering Services Co., Dubai certifies that the product(s) identified above was inspected and repaired/~~remanufactured~~ in compliance to the GE's standards and specifications, and other standards and specifications as listed above. GE is not in control of operation or maintenance of equipment once returned to the customer. Any modifications made to the equipment after issuance of this COC is at the risk of the customer.

Weir Engineering Services Co., Dubai retains supporting documentation for a period of time as specified in the applicable standards, which is available on request. The Sales Order includes the General Terms and Conditions, and the product described above is covered exclusively by the one year warranty set forth in the General Terms and Conditions. The product is subject to the limitations and exclusions of warranty and liability as detailed in the General Terms and Conditions or such other separate applicable contract that may be agreed between the parties. **Weir Engineering Services Co., Dubai** assumes customer has maintained and made available to **Weir Engineering Services Co., Dubai** traceability in accordance to the codes, standards or specifications referenced above. Any historical or present deviation from traceability and equipment operation is at the sole risk of the customer.

QA/QC Manager

Signature:

Date:

WEIR ENGINEERING SERVICES CO., DUBAI
API Q1 9th Ed., ISO 9001:2008, ISO 14001:2004 & OHSAS 18001: 2007 CERTIFIED COMPANY

HARDNESS TEST REPORT

CUSTOMER	:	REPORT NO.	: HT/3
WO NO.	:	TEST DATE	: 2016
ITEM DETAIL:	: HYDRIL 29-1/2" 500 "MSP" DIVERTER	QTY	: 01 Assy.
SERIAL/HEAT/IDENTITY NO.	:	DRAWING NO.	: AS PER WIR
MATERIAL SPECIFICATION	: P1 MATERIAL	PART TEMPERATURE	: 26°C

SPECIFICATION	HEMPS 10.801 Latest Revision	✓	API 6A Latest Revision		API 16A Latest Revision	✓	LII-003 Latest Revision	

TEST EQUIPMENT:		S/N	CAL.DUE	HARDNESS REPORTED IN		CONDITION OF TEST SURFACE:			
Affri - Digital				Brinell (HB)	✓	Received		Welded & HAZ	✓
King tester	✓	M1026	26.08.16	Vickers (HV)		Grit Blasted		Before PWHT/Stress Relieved	
Stationary Type									
Shear Pin				Rockwell C (HRC)		Machined	✓	After PWHT/Stress Relieved	
Stage Microscope S/N		: M 927		Accuracy	: 0.01mm	Cal. Due	:		
Load Applied in		: 3000KG		Type & Ball Size of Indenter	: CARBIDE GR -10 & 10mm				

HARDNESS RESULTS (VALUES/NUMBER)

S/N / PART	REQUIRED HARDNESS IN BHN	OBTAINED HARDNESS IN BHN	RESULTS	REMARKS
BODY	140-197	159	ACCEPTABLE	ON BOTTOM FLG FACE
	140-197	149	ACCEPTABLE	ON BOTTOM FLG OD
	140-197	159	ACCEPTABLE	ON BODY
HEAD	N/A	N/A	N/A	N/A
INNER -SLEEVE	140-197	156	ACCEPTABLE	ON OD
PISTON	N/A	N/A	N/A	N/A

SKETCH IF REQUIRED.

COMMENTS : The above mentioned hardness values are as found During Final Inspection of BOP

INSPECTED BY :	WITNESSED / REVIEWED BY : FOR CLIENT / TPI
SIGN	SIGN :
NAME :	NAME :
DATE :	DATE :

WEIR ENGINEERING SERVICES Co., P.O. BOX 11419, DUBAI, U.A.E TEL: 00 971 4 8080000 FAX: 00971 4 8838595 Website: www.weiroilandgas.com

© Jakarta Drilling Society 2025

Well Control System

WEIR ENGINEERING SERVICES CO., DUBAI
API Q1 9th Ed., ISO 9001:2008, ISO 14001:2004 & OHSAS 18001: 2007 CERTIFIED COMPANY

PRESSURE TEST CERTIFICATE

CERTIFICATE No.	: P	TEST DATE	: 2016
REFERENCE CHART No.	: AS PER BELOW		
CUSTOMER	:		
JOB No.	:		
ITEM DETAIL	: HYDRIL 29-1/2" 500 "MSP" DIVERTER		
SERIAL/IDENTITY No.	:	QTY.:	1 ASSY.
TEST SPECIFICATION	: HYDRIL MSP ASSY. TEST PROCEDURE		

DESCRIPTION OF PRESSURE TEST

1. CHART # PT : 2275 PSIG CLOSING CHAMBER PRESSURE TEST (PISTON UP) 3 & 15 Minutes
2. CHART # PT/ : 500 PSIG WELL BORE TEST - 10 Minutes

TEST MEDIUM	PRESSURE APPLIED	DURATION OF HOLDING
1) HYDRAULIC SYSTEM TEST WITH OIL 2) WELLBORE TEST WITH WATER	AS MENTIONED ABOVE	AS MENTIONED ABOVE

CHART RECORDER #	RANGE	CAL. DATE	CAL.DUE
: M-956 : M-837	: 0-1,000 PSI : 0-5000 PSI	: 19 JUL 2016 : 13 JUL 2016	: 19 OCT 2016 : 13 OCT 2016
PRESSURE GAUGE #	**RANGE**	**CAL. DATE**	**CAL.DUE**
: M-1142 : M-1141	: 0-1,000 PSI : 0-5000 PSI	: 21 AUG 2016 : 21 AUG 2016	: 21 NOV 2016 : 21 NOV 2016

TEST RESULT / OBSERVATIONS

NO LEAKAGE OR PRESSURE DROP NOTICED DURING ANY PRESSURE TESTS. TESTS FOUND ACCEPTABLE

For	: WEIR ENGINEERING SERVICES	Witnessed/ Reviewed By Sign	: FOR TPI / CLIENT : –
Tested By	: MYDEEN /NAUFAL		
Witnessed By Reviwed By	: WESCO QA/QC		
Name	: SURESH.M.R	Name	
Date	: 21.08.2016	Date	

WEIR ENGINEERING SERVICES Co., P.O. BOX 11419, DUBAI, U.A.E TEL: 00 971 4 8080000 FAX: 00971 4 8838595 Website: www.weirenandgas.com

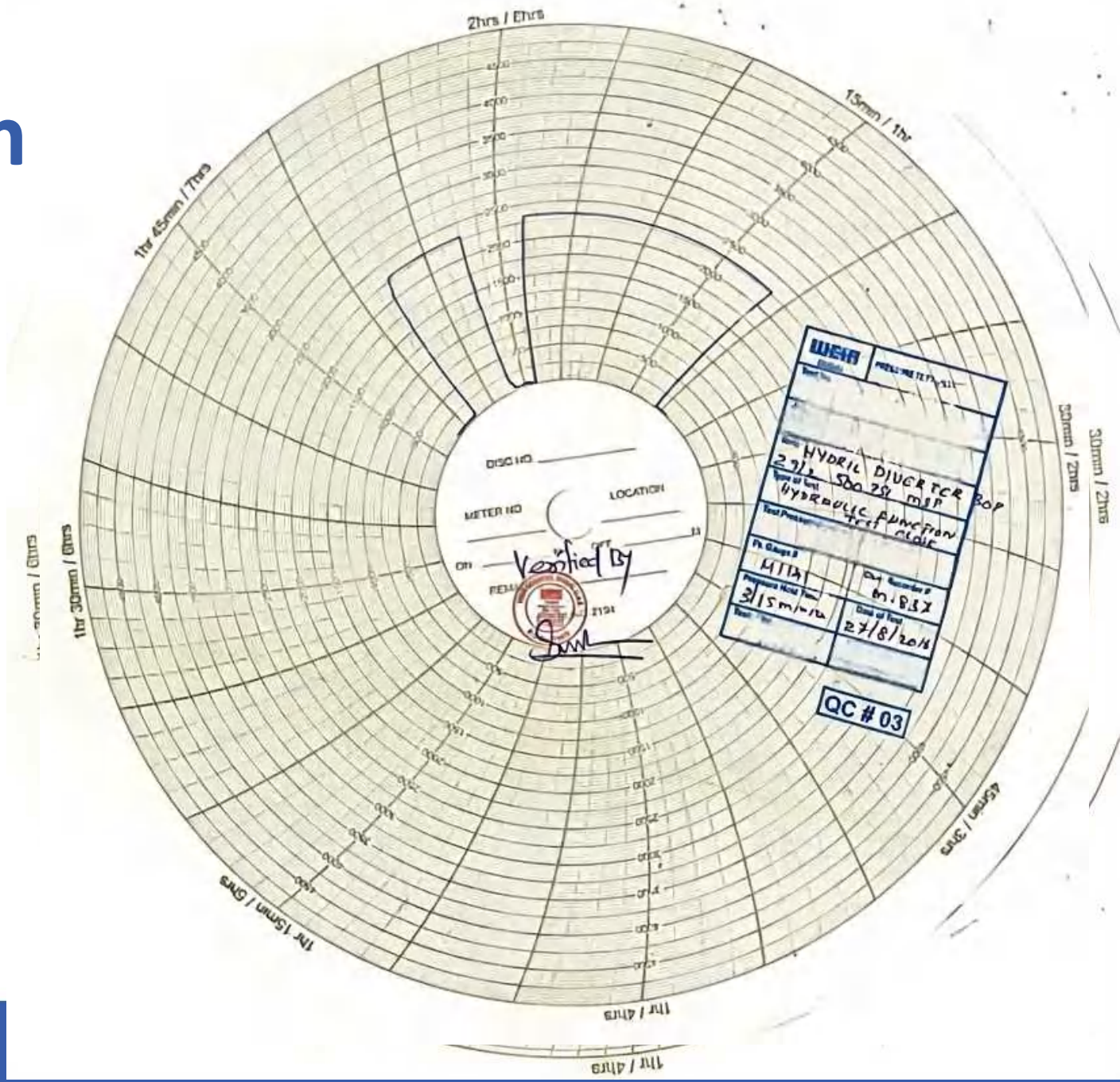

© Jakarta Drilling Society 2025

Safety Moment - DPM

Kecepatan Kereta Kencana Akan Ditentukan dari Kuda yang Paling Lambat, Bukan Kuda yang Tercepat.

Kerja Cerdas, Kerja Ikhlas, Kerja Selamat

© Jakarta Drilling Society 2025

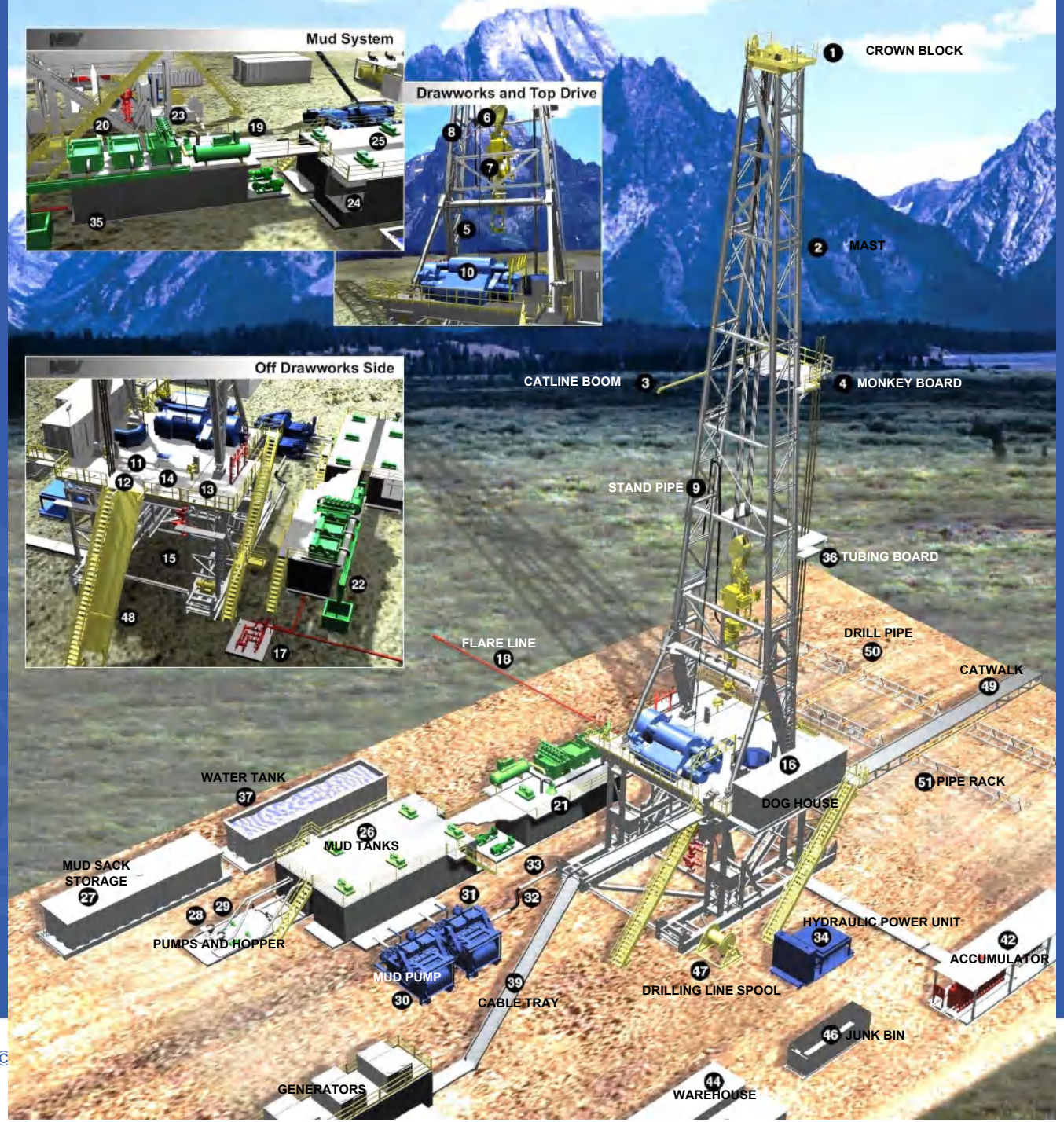

Thank You

©

JDS
Jakarta Drilling Society